ADVANCED POWER TECHNOLOGIES

2.4kV-15kV Metal-Clad Switchgear

APT VIEW ENABLED

15A-Series
Medium Voltage Metal-Clad Switchgear
Solutions Brochure

www.apt-power.com
433 N. 36th Street
Lafayette, IN 47905
(765) 446-2343

SAFE SMART SERVICEABLE SWITCHGEAR & ENGINEERED POWER SYSTEM SOLUTIONS

MADE IN THE USA

ALN: 543 Rev. 03

APT MetalClad Construction

Figure 1: 15kV Max Auxiliary Transformer Cubicle over Vacuum Circuit Breaker Metal-Clad Section

Figure 2: 15kV Max Vacuum Circuit Breaker over Vacuum Circuit Breaker Metal-Clad Section

Figure 3: 15kV Max Controls Cubicle over Vacuum Circuit Breaker Metal-Clad Section

Medium Voltage Metal-Clad Switchgear

- Smart Switchgear for the High Demands of Tomorrow!
- Designed & built to:
  - ANSI/IEEE C37.20.2
  - NEMA SG-5
  - UL Listings Available
- Applications:
  - Utility Paralleling & Generator Paralleling Switchgear
  - Main-Tie-Main Automatic or Manual Transfer Switchgear
  - Distribution Feeder Switchgear
- Main Bus:
  - Steel Enclosed Compartmentalized
  - 1200A, 2000A, 3000A
  - Durable Industrial Vinyl Mimic Bus
- Infrared (IR) Viewing Windows
- Symmetrical Interrupting Capacity:
  - 2.4kV-15kV: 40kA, 50kA, 63kA
- Enclosure Environment Rating Options:
  - NEMA 1 (indoor)
    - Note: Circuit breakers in lower sections can be rolled out directly on the floor without the need for a ramp or lifting device without a housekeeping pad
  - NEMA 3R (outdoor) Non-Walk-In
  - Integrated onto APT PwrSkid Outdoor Non-Walk-In Switchgear Skid
  - Integrated into APT PwrHouse Outdoor Walk-In Switchgear Building
  - NEMA 3R hardware is stainless steel
  - NEMA 3R Doors are Padlockable
  - Carbon Steel Powder coated ANSI 61 Gray

*Due to continued product improvement, products delivered may differ from what is pictured.
*Optional Equipment Features Are Often Shown in Most Figures.
*Option Availability Subject to Product Series.

APT Paralleling System Modules

Figure 4: Stand-alone Fully Isolated Master Control Panel (MCP) built with APT Control System Modules: UI, ATC, MG

Figure 5: UP Master Control System with Manual Generator Operation Controls

Multi-source Paralleling & Transfer Controls

- (GP) – APT ACM Generator Paralleling – requires one per generator:
  - Automatic generator paralleling control for each generator, configured to synchronize, bring multiple generators on-line, and service the load.
  - Expandable system architecture allows for any number of generators in the system.
- (A2) – AdAPTor 2 Generator Only Paralleling Control Module – maximum one per two generators:
  - Automatic generator paralleling controls for use with synchronizing two generators in a non-expandable, cost effective system.
- (N1) – APT N+1 Redundant Generator Transfer Control – requires one per switchgear:
  - Control for systems with back-up generator(s) to provide facilities with levels of redundancy and protect against back-up generator failure.
- (LDC) – APT Load Demand Control – maximum one per switchgear:
  - Manually initiated automatic sequence to avoid extended operation of generators at light load after system has stabilized in emergency operation.
- (IM) – APT Island Mode Control – maximum one per switchgear:
  - Allows safe system operation in isolation from the local electricity distribution network.
- (UP) – APT Utility Paralleling (Base Load) – requires one per utility source:
  - Integrated utility grade interconnection protection & control as required to meet ANSI/IEEE 1547 standard with source paralleling controls to match a utility source with other utility feeds or generator sources.
  - Includes APT Generator Base Load - Paralleled generator set(s) soft load to a desired constant load level against utility.
- (UI) – APT Utility Intertie – requires one per utility:
  - Stand-alone utility grade interconnection protection & control as required to meet ANSI/IEEE 1547 standard without paralleling or transfer controls.
  - Versatile, compact, and cost-effective

*Due to continued product improvement, products delivered may differ from what is pictured.
*Optional Equipment Features Are Often Shown in Most Figures.
*Option Availability Subject to Product Series.

APT Control System Modules & SCADA

Figure 6: UP, PS, & ATC Control System Modules in Master Control Panel

Figure 7: GP Control System Module with Integrated Lights, Sync Control Switches

We Are the Generator & Utility Source Experts!

- (PS) – APT Peak Shaving (Base Load) – maximum one per switchgear:
  - Controls and adjusts the generator load levels to limit the amount of energy purchased from the utility during peak demand hours.
- (IE) – APT Import/Export Control (add-on to UP/PS) – maximum one per switchgear:
  - Maintains constant utility contribution to a site load by monitoring the utility contribution and trimming generator set load levels up and down as site loads change.
  - In Import Mode, generator kW remains constant while the utility kW loading follows load kW fluctuations.
  - In Export Mode, utility kW remains constant while the generator kW loading follows load kW fluctuations.
- (ATO) – APT Automatic Standby Open Transfer Control Module – maximum one per switchgear:
  - Automatically transfers power between utility and generator in a “break-before-make” fashion.
    - “Break-before-make” disconnects one power source before it contacts another.
  - When test/transfer mode is turned off, power transfer from the generator back to utility is also “break-before-make.”
  - Produces two brief power outages – one outage per transfer.
  - Includes several standby operation timers that help quickly return circuit breakers to normal positions after a power outage.
- (ATC) – APT Automatic Standby Closed Transfer Control Module – maximum one per switchgear:
  - Can test the back-up system without creating a power outage.
  - Power is transferred from utility to generator in a “make-before-break” fashion by using active generator synchronizing.
  - When test/transfer mode is turned off, power is transferred back from generator to utility again using “make-before-break.”
  - Can also be used as an effective means of “peak shaving” facility loads to reduce utility bills.
  - This mode can be also initiated remotely by a utility RTU of facility energy control system.
  - Includes several standby operation timers that help synchronize the generator and utility, and automatically restore power.
  - Several utility setpoints and standby operation timers are adjustable from the operator interface panel once the generator cools down after an outage.

*Due to continued product improvement, products delivered may differ from what is pictured.
*Optional Equipment Features Are Often Shown in Most Figures.
*Option Availability Subject to Product Series.

APT Control System Modules & SCADA

Figure 8: ATO & SL (selectable) Control System
Local Operator Interface

In-House Designed & Built Master Controls with Manual & Electrical Interlocking Systems

Generators, Utilities, Renewables Source Control

- (SL1) – APT Automatic Soft-loading/Unloading – maximum one per switchgear:
  - Can either be used by an operator on-site or remote customer SCADA or DCS System.
  - Includes several standby operation timers that help automatically restore power.
  - Generator sets can automatically synchronize with the utility while trying to restore power.
  - Generator set is gradually (soft) loaded to assume the entire site load (entire site load minus adjustable “zero power level” setpoint) and utility circuit breaker shall be tripped open.
    - Transfers loads between two sources while minimizing voltage or frequency changes.
  - Loading and unloading rates and “zero power level” setpoints shall be viewable and adjustable from the operator interface panel mounted on the control panel’s front door once generator cools down after an outage.
- (MT) – APT Manual Transfer – maximum one per switchgear:
  - System operator executes a sequence of manual operational steps to actuate electrically, or mechanically interlocked source disconnects, preventing inadvertent paralleling of sources.
  - Includes a two-lock, two key combination to help you make sure this mode is reliable and safe for system configuration.
- (NA) – APT Non-Automatic Operator Supervised Return to Normal – maximum one per switchgear:
  - Operator initiated automatic transfer back to the primary source after an automatic transfer sequence has occurred.
- (AR) – APT Automatic Return to Normal – maximum one per switchgear:
  - Fully automated transfer back to the primary source, upon sensing a healthy primary source, without operator initiation.
  - Reduces installation time.
- (LS) – APT Load Shed Control – maximum one per switchgear:
  - Opens designated feeders during an outage and allows for only critical & life safety loads to be connected to the secondary source.
  - Modifies automatic load add and shed sequence.

*Due to continued product improvement, products delivered may differ from what is pictured.
*Optional Equipment Features Are Often Shown in Most Figures.
*Option Availability Subject to Product Series.

APT Control System Modules & SCADA

Figure 9: Top Section Line-Up Integrated
20" Master Control HMI with APTView SCADA

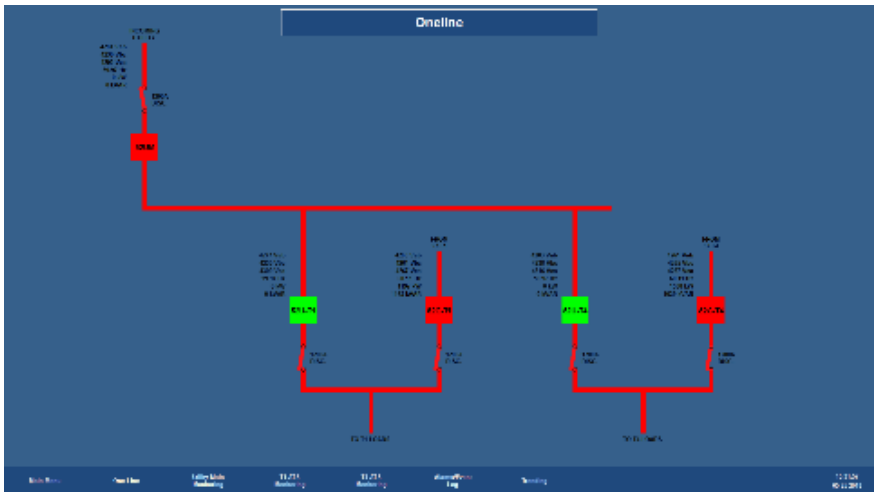

Figure 10: APTView SCADA HMI with System One-line

Generators, Utilities, Renewables Source Control

- (BI) – APT Maintenance Bypass/Isolation with Captive Key – maximum one per switchgear:
  - Manually bypass live power flow from source to load in the case that parts of the equipment are disabled/need to be isolated, de-energized for maintenance, testing, or repair.
- (MG) – Microgrid Interconnection – maximum one per switchgear:
  - Provides real time integrated control of power production/supply by renewable energy sources, natural gas/ diesel generators, and energy storage for load power consumption for large scale (500kW – 50 MW) microgrid systems.
  - Emergency operation time can be extended as much as six times with the same amount of on-site fuel storage.
  - Can use peak shaving method to reduce utility bills and improve Load Demand Management Control.
- (EX) – External (Paralleling and/or Transfer, Load Shed) By Others:
  - Controls facilitated by other manufacturers than APT are to be used in APT switchgear to meet the desired Sequence of Operations. (Customer to Specify Controls Manufacturer & Controls Location)
- (AV) – APTView Remote SCADA System:
  - 20" Color touch-screen shows state-of-the -art graphics.
  - Smartphone-compatible
  - Makes safety the top priority while eliminating operator personnel from the switchgear location.
  - Utilizes Human Machine Interface (HMI) systems to monitor and control both APT and 3rd party equipment via personal computers or your web/network-connected mobile device.
  - Requires fast internet connection and Static IP.
  - Emails can be sent to notify the user of any occurring alarm.
  - All system alarms and events are logged and date/time stamped.
  - Equipment operating parameters are periodically stored for future record/retrieval.
  - Customer specified security features to limit access only to the people who need access for maximum security.

*Due to continued product improvement, products delivered may differ from what is pictured.
*Optional Equipment Features Are Often Shown in Most Figures.
*Option Availability Subject to Product Series.

APT Control System Modules & SCADA

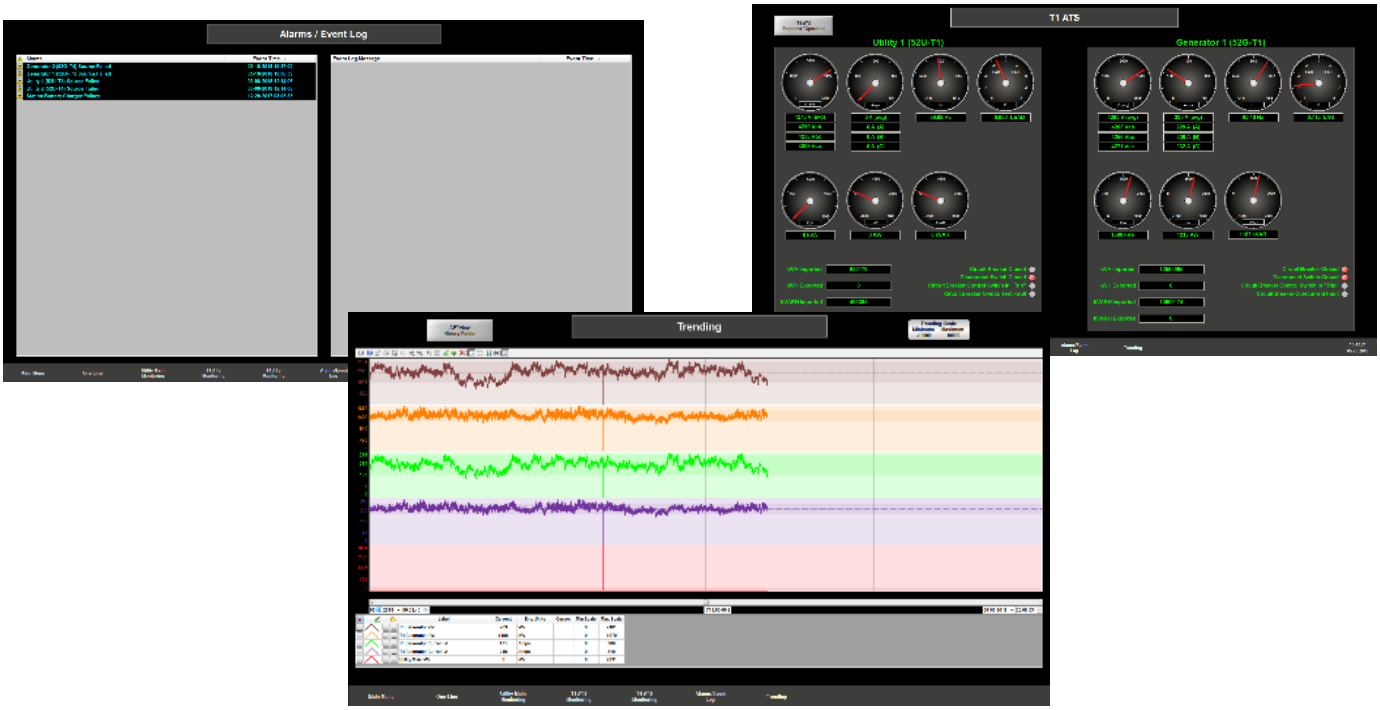

Figure 11: Event Log (top left), Source Metering Data (top right),
Power Usage Time Adjustable Trend Chart (bottom)

Generators, Utilities, Renewables Source Control

- (BSI) – External BAS SCADA Interfacing:
  - Information from switchgear is converted to MODBUS TCP/IP format and presented through an Ethernet port for easy remote monitoring and control system.
  - You can see various electrical data, including line to line voltages, generator and utility frequencies, and power and emergency parameters.
  - You can also see circuit breaker positions and set several alarms.
  - Includes adjustable setpoints.
  - You can set system to be ready for remote start, which may satisfy application.

*Due to continued product improvement, products delivered may differ from what is pictured.
*Optional Equipment Features Are Often Shown in Most Figures.
*Option Availability Subject to Product Series.

Enclosed Insulated Main Bus

Figure 12: 15kV Max Line-Up with Rear Sheets Removed, Showing Enclosed Main Bus Compartments & Incoming/Outgoing Surge Arresters

Figure 13: Inside Rear of Metal-Clad Bus Tie Section

1200A – 3000A Main Bus

- Steel Enclosed Main Bus Compartment:
  - Epoxy coated silver-plated copper, with bolted connections covered by insulating boots
  - Grounded metal barriers mitigate the risk of fault propagation between major component compartments
- Symmetrical Interrupting Capacity:
  - 2.4kV-15kV: 40kA, 50kA, 63k
- Optional Surge Arresters for main bus protection and individual incoming utilities/outgoing feeders
  - Distribution Class
  - Intermediate Class
  - Station Class
- Incoming Cable Barrier Chutes (as required)

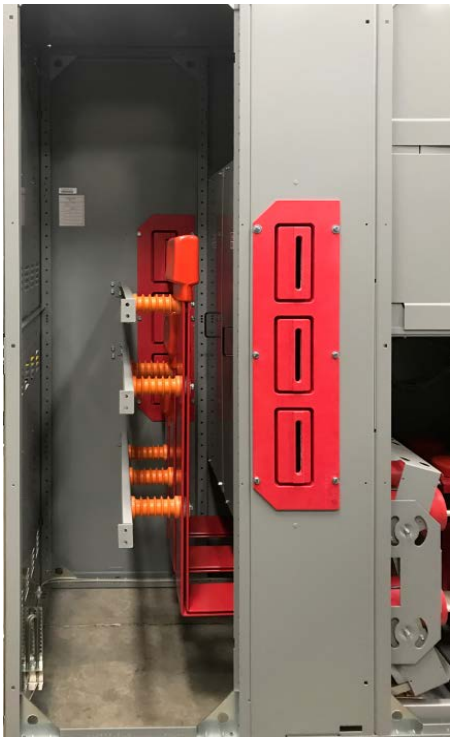

Figure 14: Side View of Bus A Connecting to Bus B in the 15kV Max Metal-Clad Bus Tie Section

*Due to continued product improvement, products delivered may differ from what is pictured.
*Optional Equipment Features Are Often Shown in Most Figures.
*Option Availability Subject to Product Series.

Vacuum Circuit Breakers (VCBs)

Figure 15: 15kV Main-Tie-Main Metal-Clad Switchgear Line-up

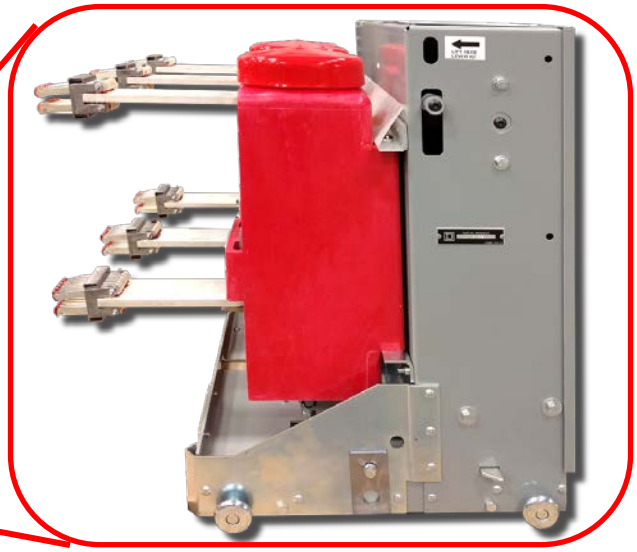

Figure 15a: 15kV Max Vacuum Circuit Breaker Side View

High Performance, Robust, Draw-out

- Draw-out removable vacuum circuit breakers
- Integral manual charging handle
- Mechanical interlocks prevent withdrawal or insertion of the circuit breaker when main contacts are not open
- Closing springs automatically discharge before moving the circuit breaker out of the enclosure
- Circuit breaker cell mechanism maintains trip during insertion or withdrawal
- Breaker cannot be electrically or mechanically closed when in the intermediate position
- Supports three position indication: Connected, Transport, Test/Disconnected
- All live parts are enclosed in grounded metal compartments & Breaker frame remains grounded during levering and in the connected position
- Grounded metal shutters automatically cover primary connections when circuit breaker is removed from the Connected position
- Cells are keyed to ensure only correct breaker rating can be installed in cell
- High-speed operation – complete fault clearing in less than 3 cycles
- Hermetically sealed vacuum interrupters protect contacts from corroding elements and contamination
- Vacuum interrupters with copper chrome contacts provide superior dielectric strength and very low
- Easy maintenance with contact wear indicator is provided on the vacuum interrupter moving stem
- Periodic visual inspection with a feeler gauge is required to verify that the contacts have not worn out

*Due to continued product improvement, products delivered may differ from what is pictured.
*Optional Equipment Features Are Often Shown in Most Figures.
*Option Availability Subject to Product Series.

Available VCB Ratings

Figure 16: 15kV Max Vacuum Circuit Breaker Front View

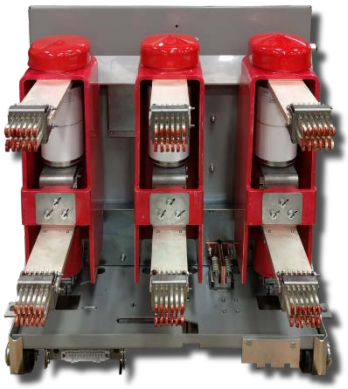

Figure 17: 15kV Max Vacuum Circuit Breaker Rear View

Table 1: Standard Vacuum Circuit Breaker Ratings

MVA Rating (reference only)	Actual MVA @ Operating Voltage	Rated Continuous Current	Voltage		Dielectric Ratings		Short Circuit Current					Mechanical Endurance
			Max Rated Voltage	Range Factor	Power Frequency	Impulse 1.2 x 50µs	System Interrupting	Close and Latch Rating	Short-Time Current Rating	Short-Time Current Duration	Interrupting Time	No Load Mechanical Operations
		A RMS	kV RMS	K	kV RMS	kV peak	kA RMS	kA peak	kA RMS	s	Cycles	
250	330	1200	4.76	1.0	19	60	40	104	40	2	3	10,000
250	330	2000	4.76	1.0	19	60	40	104	40	2	3	10,000
250	330	3000	4.76	1.0	19	60	40	104	40	2	3	5000
350	412	1200	4.76	1.0	19	60	50	130	50	2	3	5000
350	412	2000	4.76	1.0	19	60	50	130	50	2	3	5000
350	412	3000	4.76	1.0	19	60	50	130	50	2	3	5000
500	572	1200	8.25	1.0	36	95	40	104	40	2	3	10,000
500	572	2000	8.25	1.0	36	95	40	104	40	2	3	10,000
500	572	3000	8.25	1.0	36	95	40	104	40	2	3	5000
500	650	1200	15	1.0	36	95	25	65	25	2	3	10,000
500	650	2000	15	1.0	36	95	25	65	25	2	3	10,000
500	650	3000	15	1.0	36	95	25	65	25	2	3	5000
750	1039	1200	15	1.0	36	95	40	104	40	2	3	10,000
750	1039	2000	15	1.0	36	95	40	104	40	2	3	10,000
750	1039	3000	15	1.0	36	95	40	104	40	2	3	5000
1000	1299	1200	15	1.0	36	95	50	130	50	2	3	5000
1000	1299	2000	15	1.0	36	95	50	130	50	2	3	5000
1000	1299	3000	15	1.0	36	95	50	130	50	2	3	5000

*Due to continued product improvement, products delivered may differ from what is pictured.
*Optional Equipment Features Are Often Shown in Most Figures.
*Option Availability Subject to Product Series.

VCB Equipped Features Diagram

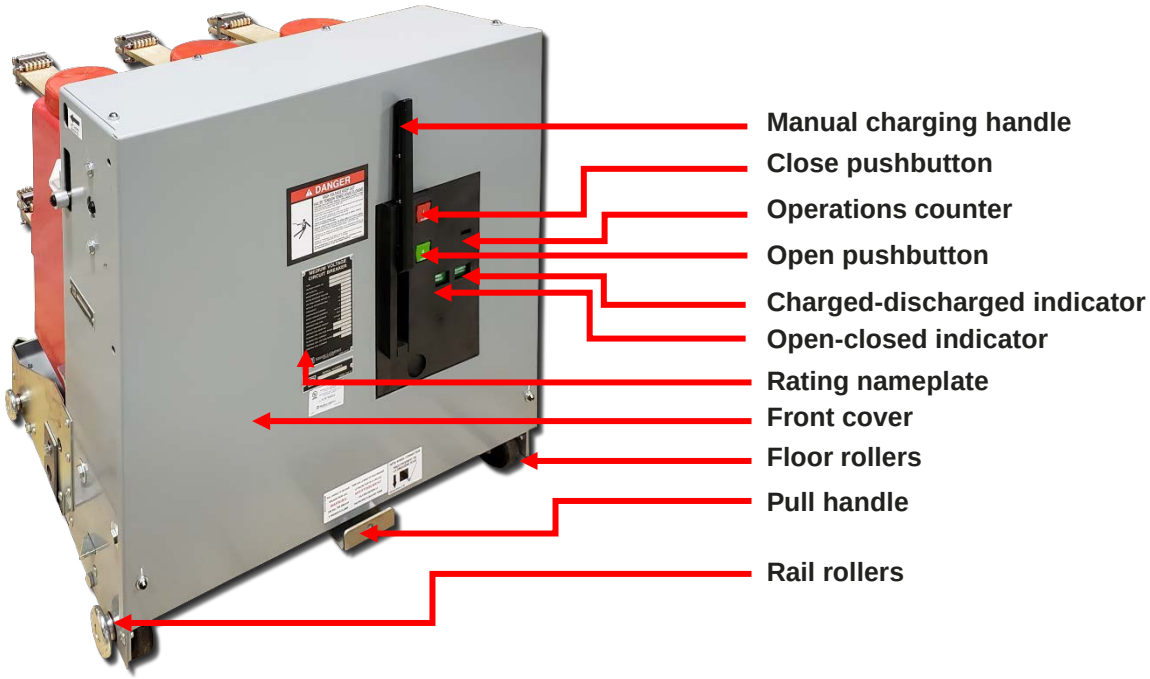

Figure 18: 15kV Max Vacuum Circuit Breaker Features Front View

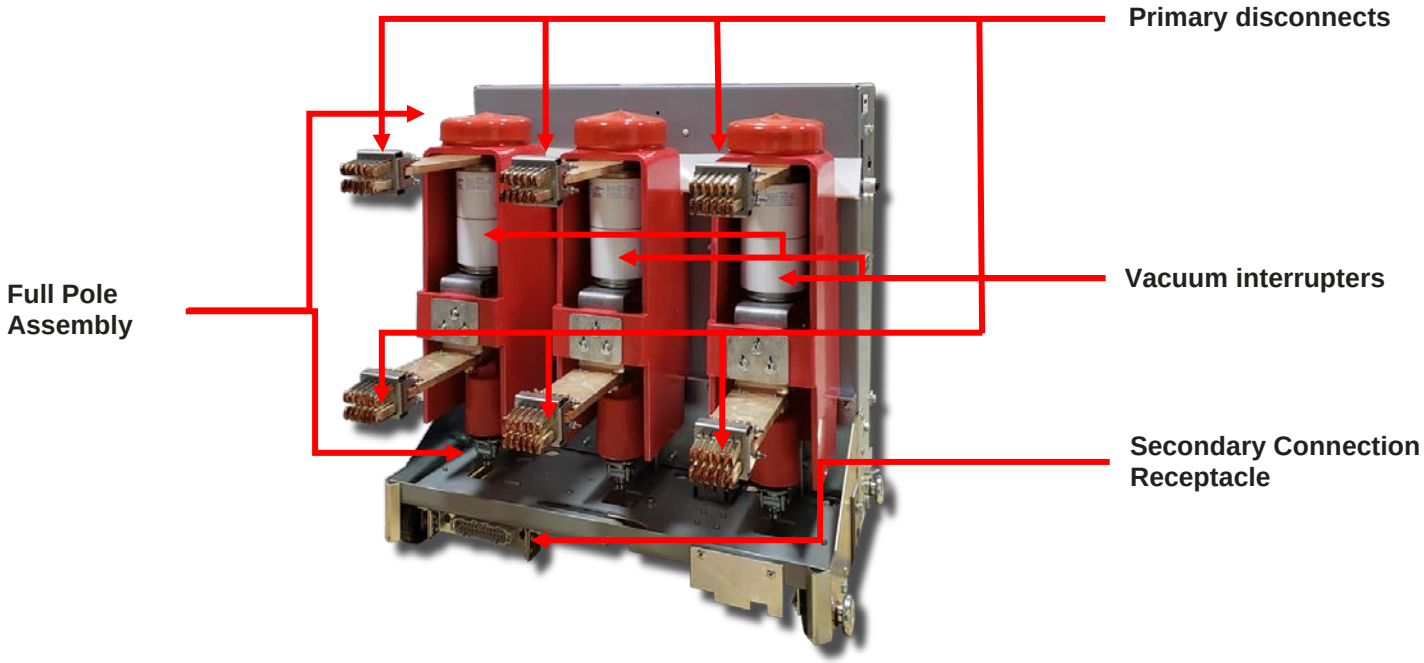

Figure 19: 15kV Max Vacuum Circuit Breaker Features Rear View

*Due to continued product improvement, products delivered may differ from what is pictured.
*Optional Equipment Features Are Often Shown in Most Figures.
*Option Availability Subject to Product Series.

VCB Cell Features Diagram

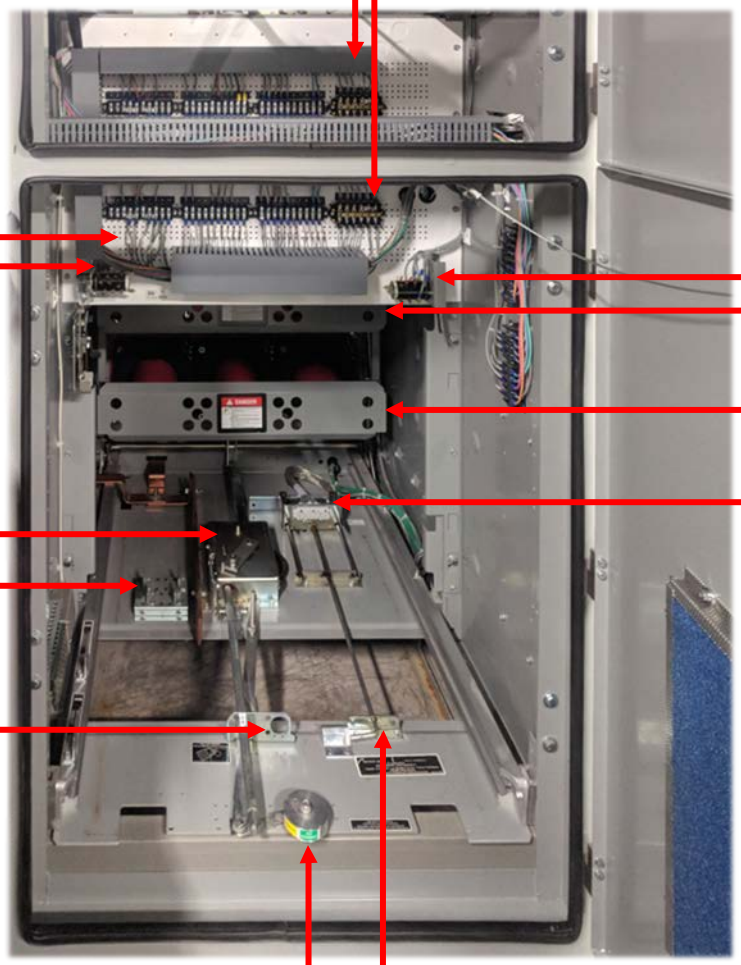

Wiring
Type SIS wiring for all control, PT, and CT wiring within the MV Cell

M-O-C
Location for optional mechanism operated contacts indicating status of the breaker: Open or Closed

Racking Interlock
This mechanism ensures a trip is maintained during racking of the circuit breaker into the cell

Breaker Rating Interlock
The cell can be keyed to eliminate the possibility of inserting an improperly rated circuit breaker

Shutter Locking Provision
Racking mechanism can be Kirk Keyed or padlocked to ensure racking of the circuit breaker into or out of the cell is prohibited

Breaker Position Indicator
Visible with the door open or closed, the clearly marked color coded indicator shows the breaker position as either Connected (red), Transport (yellow), Test/Disconnected (green)

Shorting Terminal Blocks
These terminal blocks are used for all CT wiring to ensure serviceability of energized equipment

T-O-C
Location for optional auxiliary contacts indicating status of the breaker position: Connected, or Test/Disconnected

Shutters
When the breaker is removed, the shutters automatically close, separating the compartment from energized components

Breaker Secondary
Self-aligning plug connects automatically upon insertion of the circuit breaker

Breaker Secondary Handle
While the breaker is in the test position, the secondary handle can be pulled to engage the secondary wiring with the breaker

Figure 20: Medium Voltage Metal-Clad Vacuum Circuit Breaker Switchgear Cell

*Due to continued product improvement, products delivered may differ from what is pictured.
*Optional Equipment Features Are Often Shown in Most Figures.
*Option Availability Subject to Product Series.

Draw-out Circuit Breaker Removal

Figure 21: Lift Truck in draw-out circuit breaker removal configuration

Figure 22: Lift Truck adapter to be used only for removal of Potential or Control Power Transformers (PTs or CPTs)

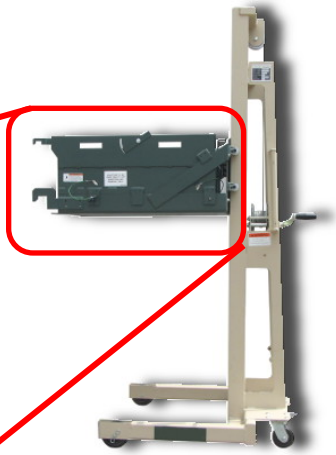

Figure 23: Lift Truck in draw-out PT or CPT removal configuration

VCB Lift Truck Removing VCB from NEMA 3R Switchgear

Figure 24: Lift truck pushed toward the circuit breaker cell & locked into CB cell rails for VCB removal

Figure 25: Circuit breaker rolled onto lift truck

Figure 26: Cradle raised to clear the blocks on each side of the circuit breaker cell rails

Figure 27: Lift truck removed with circuit breaker from the circuit breaker cell

Figure 28: Circuit breaker on lift truck cradle lowered to the floor

Figure 29: Circuit breaker removed from safety disconnect of lift truck and rolled onto the floor

*Due to continued product improvement, products delivered may differ from what is pictured.
*Optional Equipment Features Are Often Shown in Most Figures.
*Option Availability Subject to Product Series.

Protective Relaying & Switches

Figure 30: ANSI/IEEE 1547 Utility Intertie Protection Relays, Test Switches, Pistol Grip CB Switch & (86) Oval Handle Lockout Relay

Figure 31: Generator Protection Relay Section with Mimic Bus, Pistol Grip Circuit Breaker Control Switch & Lockout Relay

Utility Intertie, Generator Syncing, Feeder Protection

- Applications:
  - Utility Intertie & Paralleling Protection
  - Advanced Generator Protection
  - Tie Protection
  - Transformer Protection
  - Feeder Protection
  - Various Differential Protection Schemes
- Typical Relaying functions:
  - 25 – Synch Check
  - 32 – Reverse Power
  - 50/51 – Inst./Time Overcurrent
  - 50G/51G – Inst./Time Ground Overcurrent
  - 27/59 – Under/Overvoltage
  - 59N – Ground Overvoltage
  - 81U/81O – Under/Over frequency
  - 40 – Loss of Excitation
  - 60 – Current Balance
  - 67 – Directional Overcurrent
  - 86 – (LOR) Lock-Out Relay (Oval Handle)
  - 87 – Differential Protective Relay
  - 87B – Bus Differential
- (PG) – Pistol Grip CB Control Switches
  - Red & Green Target to Indicate Last Position of Circuit Breaker Status
- (TS) – Test Switches & (TP) – Test Plugs
  - Provide a safe, simple, fast, and reliable method to isolate, test & service installed equipment without disturbing the power system
  - Permits convenient isolation of relays, meters, and instrument transformers (PTs & CTs)
  - Allows for quick and easy multi-circuit testing by conventional test methods
  - Enables easier measurement, calibration, verification and maintenance of relays, meters, PTs, & CTs
  - Optional Test Plugs allow for the convenient plug style connection of external devices measuring the currents and voltages being applied to components begin tested without interrupting or short-circuiting the circuit

*Due to continued product improvement, products delivered may differ from what is pictured.
*Optional Equipment Features Are Often Shown in Most Figures.
*Option Availability Subject to Product Series.

Instrument Transformers – PTs, CTs

Figure 32: Access to Top Section Draw-out Voltage Transformers (PTs) Drawer

Figure 33: Auxiliary Drawer Secondary Self-Aligning Contacts

Figure 34: 5kV - Top, 15kV – Bottom Inside Open Drawer Mounted Draw-out Voltage Transformers (PTs) & Access to Primary Fuses

Voltage Transformers (PTs) & Current Transformers (CTs)

- Auxiliary Drawers
  - Accommodate Fuses, Control Power Transformers or Voltage Transformers
  - Secondary Self-aligning Contacts accommodate up to six independent circuits
  - Automatically grounded during movement to disconnected position for operator safety
- PTs Available in Wye or Open Delta Voltage Sensing Configurations
- CTs for Relaying/Power Sensing, Differential, or Ground Fault sensing available in standard or Revenue Grade Metering Accuracy
  - Mounting assembly should be insulated for full voltage rating.

Figure 35: Primary Mounted Relaying Current Transformers (CTs) with Secondary Mounted High Accuracy, Revenue Grade Metering CTs

*Due to continued product improvement, products delivered may differ from what is pictured.
*Optional Equipment Features Are Often Shown in Most Figures.
*Option Availability Subject to Product Series.

VCB In & Out Electronic Remote Racking Device

Figure 39: Electric Racking Device with cable to accommodate remote racking of the circuit breaker up to 50 ft away

Figure 40: Electric Racking Device installed onto switchgear section circuit breaker racking mechanism

- Electric rack devices from the TEST/DISCONNECT position to the CONNECTED position in the circuit breaker cell
- 50 ft. (15.2 m) long cord to allow for remote racking from a distance, making operator safety the top priority
- Clutch limits the torque applied to the circuit breaker racking gears
- Requires 120VAC customer supplied control power within the switchgear installation area; may require extension cord

Wall-mountable Circuit Breaker Test Cabinet

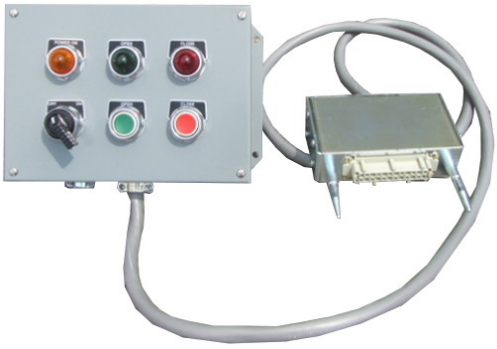

- Tests the circuit breaker for proper operation when removed from the circuit breaker cell
- Compact wall-mountable design; requires customer supplied switchgear control power input
- On-off toggle switch, power-on indicating light, breaker position indication lights, CLOSE & OPEN push buttons
- 8 ft. (2.4 m) cable with connection plug for secondary connection receptacles at the rear of the circuit breaker

*Due to continued product improvement, products delivered may differ from what is pictured.
*Optional Equipment Features Are Often Shown in Most Figures.
*Option Availability Subject to Product Series.

Manually & Electrically Operated Ground & Test Devices

Figure 43: Manually Operated Ground & Test Device

Figure 44: Electrically Operated Ground & Test Device with Permissive Switch Electrically Operated Ground & Test

- Measure resistance, perform phasing operations, apply power for a high potential test or for fault location
- Convenient way to ground the load cables or the bus during initial installation and maintenance
- Ensures that the closing springs can only be charged electrically with the device in the connected or test position
- Fig. 44 includes three-position, permissive control transfer switch

Hinged Rear Doors & Infrared (IR) Viewing Windows

Figure 45: Rear of Non-Walk-In NEMA 3R Metal-Clad Switchgear with Hinged Rear Doors with IR Viewing Windows

Figure 46: Rear of Walk-In NEMA 3R Metal-Clad Switchgear Enclosure with Outer Hinged Rear Doors & Inner Removeable Sheets with IR Viewing Windows

- IR Windows can measure temperature without removing the sheet metal cover on the panel
- IR Window Ports include removable covers for maintaining "Hot Spot" Inspection in the breaker compartment
- IR Windows come with an outside infrared camera
- Inner removable sheets provided for easy connection
- Hinged Rear Doors come with a padlock

*Due to continued product improvement, products delivered may differ from what is pictured.
*Optional Equipment Features Are Often Shown in Most Figures.
*Option Availability Subject to Product Series.

Figure 47: Front of Enclosed Intelligent Battery Charger

Figure 48: Rear of Enclosed Intelligent Battery Charger

24VDC Switchgear Battery Charger

- Charges 24VDC Control Power Batteries for all Switchgear System Ratings:
  - Low Voltage: 208V-690V (3Ø)
  - Medium Voltage: 2.4kV-38kV (3Ø)
- Automatic three stage charging
- Adjustable current limit
- Dual purpose battery charger and power supply can be used simultaneously
- Automatic or Manual boost and storage charge functions help maintain battery condition
- Digital Microprocessor Technology
- Temperature compensation for battery charging
- Low Output Ripple and superb line regulation
- AC input Under/Over voltage Protection
- Battery charger output over voltage/ current protection
- Output short circuit and Inversion polarity with auto recovery
- Automatic power de-rating at high ambient temperatures
- Optional Features:
  - MODBUS RTU Communications using RS-485
  - Additional sizes: 20A, 30A, 40A, and 50A are available upon request

*Due to continued product improvement, products delivered may differ from what is pictured.
*Optional Equipment Features Are Often Shown in Most Figures.
*Option Availability Subject to Product Series.

Shipping Splits & Lifting Provisions

Figure 49: NEMA 1 Switchgear Line-Up with Individual Section Shipping Splits

Figure 50: Ship Loose Switchgear Bus Splices for Contractor Installation During On-site Shipping Split Reassembly & Installation

On-Site Installation Made Easy Is Standard!

- Ships as a completely assembled line-up for drop in place easy installation and little on-site assembly time
  - Connect your incoming/outgoing cables and field control wiring, test, and commission without all the additional labor of reassembling and interconnecting sections of switchgear
- Shipping Splits Available Upon Request
  - Gives the flexibility to bring switchgear through narrow hallways and doors
  - Bus Splice Pieces Shipped Loose for customer installation
- Maneuverability:
  - Option 1: Heavy Duty Lifting Angles allow for less time and errors in the field
  - Option 2: Base with Fork Truck Pockets

Figure 51: Top Mounted, Removeable Heavy Duty Lifting Angles Allow for Crane Maneuvering

*Due to continued product improvement, products delivered may differ from what is pictured.
*Optional Equipment Features Are Often Shown in Most Figures.
*Option Availability Subject to Product Series.

PwrHouse Walk-In Switchgear E-House

Figure 52: PwrHouse Outdoor Walk-In Medium Voltage Metal-Clad Utility & Generator Paralleling Switchgear Enclosure

Figure 53: PwrHouse with Customer Specified Color

APT PwrHouse outdoor walk-in switchgear e-house offers a clean and safe work environment in an optional climate-controlled aisle

Figure 54: PwrHouse Inside Aisle of 20' Medium Voltage Metal-Clad Distribution Switchgear E-House with Isolated Operator Control Panel

Figure 55: PwrHouse Relative Aisle Space (VCB withdrawn & in Aisleway) Includes Plenty of Space for Circuit Breaker Removal Devices

Figure 56: PwrHouse Inside Aisle of 35' Medium Voltage Utility & Generator Paralleling Switchgear E-House with Integrated Master Control

*Due to continued product improvement, products delivered may differ from what is pictured.
*Optional Equipment Features Are Often Shown in Most Figures.
*Option Availability Subject to Product Series.

Metal-Clad E-House Construction

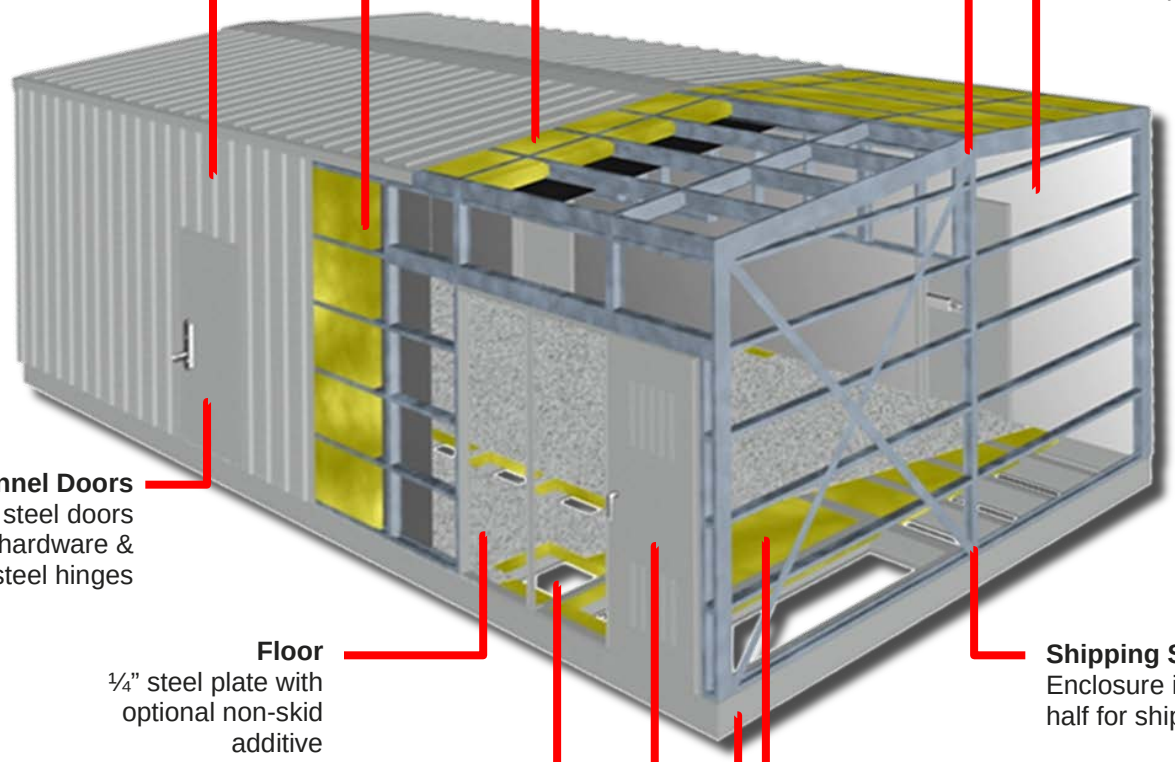

Figure 57: PwrHouse Construction Features Diagram

*Due to continued product improvement, products delivered may differ from what is pictured.
*Optional Equipment Features Are Often Shown in Most Figures.
*Option Availability Subject to Product Series.

Base/Skid Mounted

Figure 58: PwrSkid Base/Skid Mounted Medium Voltage Metal-Clad Utility Intertie & Distribution Switchgear with Side Mounted 90° Turned Isolated Master Control Panel

Outdoor Equipment Pad Mounted without Base

Figure 59: Outdoor Non-Walk-In Switchgear with Cabinet Doors Open for Concrete Pad Mounting without Base/Skid

Figure 60: NEMA 3R Non-Walk-In Switchgear for Concrete Pad Mounting without Base/Skid

*Due to continued product improvement, products delivered may differ from what is pictured.
*Optional Equipment Features Are Often Shown in Most Figures.
*Option Availability Subject to Product Series.

Typical Single Section Dimensions

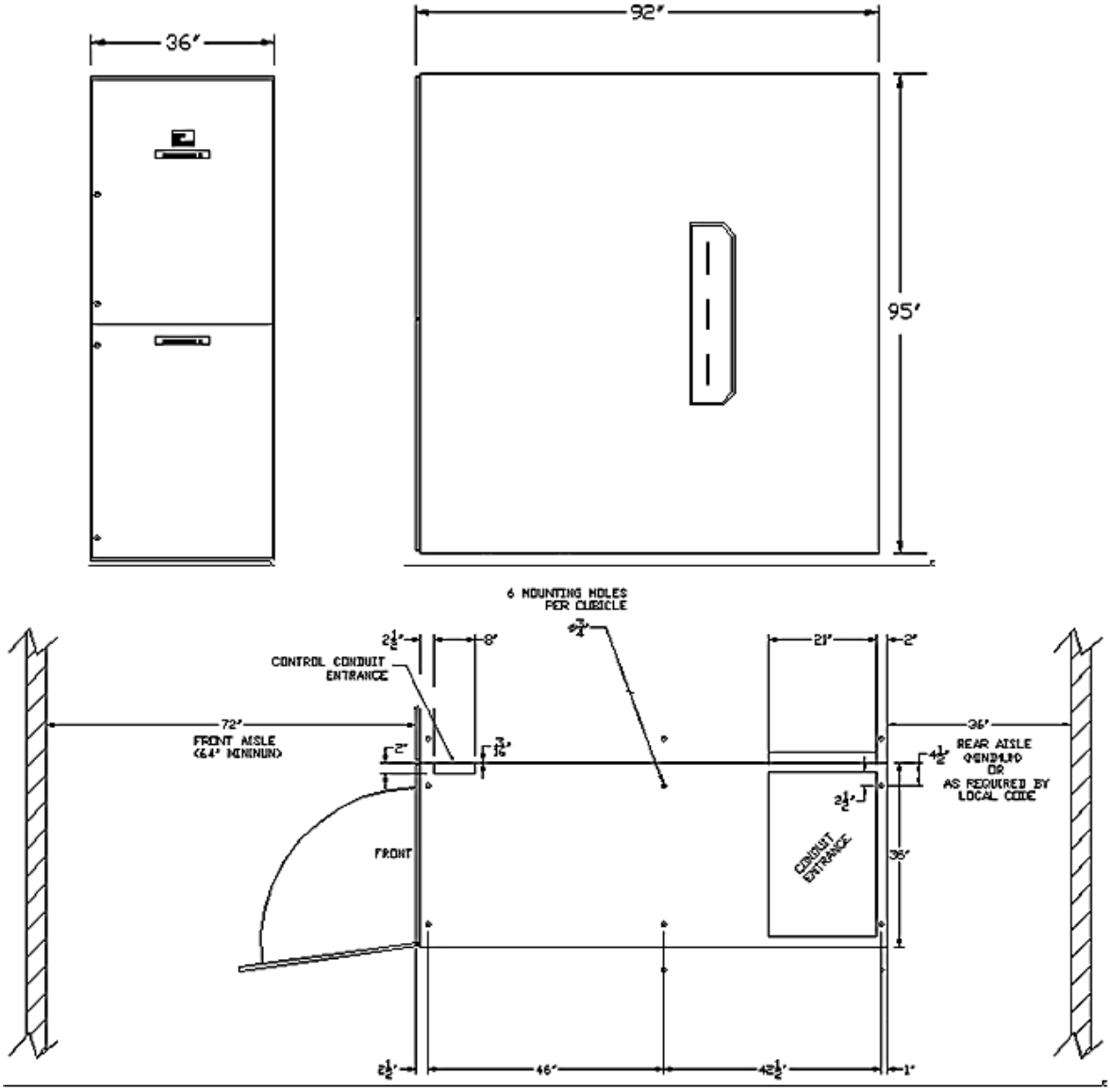

Figure 61: Metal-Clad Switchgear Front, Side, & Top Views – Dimensions Typical of NEMA 1 Section; NEMA 3R adds several inches to the Height & Depth

Table 2: Standard Section Weights	
Component	Weight Per
NEMA 1 Section (Less Breakers)	2000 lbs.
NEMA 3R Section (Less Breakers)	3000 lbs.
1200A Circuit Breaker	360 lbs.
2000A Circuit Breaker	410 lbs.
3000A Circuit Breaker	480 lbs.

*Due to continued product improvement, products delivered may differ from what is pictured.
*Optional Equipment Features Are Often Shown in Most Figures.
*Option Availability Subject to Product Series.

APT Application One-Line Diagrams

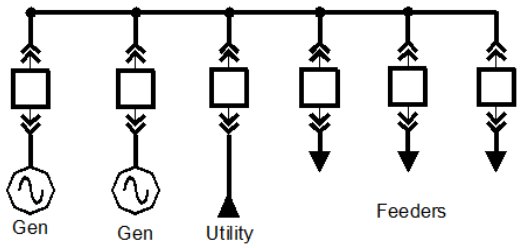

Figure 62: Utility & Two Generator Paralleling Switchgear with Distribution

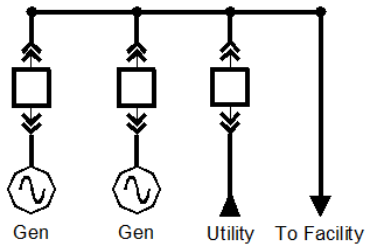

Figure 63: Utility & Two Generator Paralleling Switchgear with External Distribution

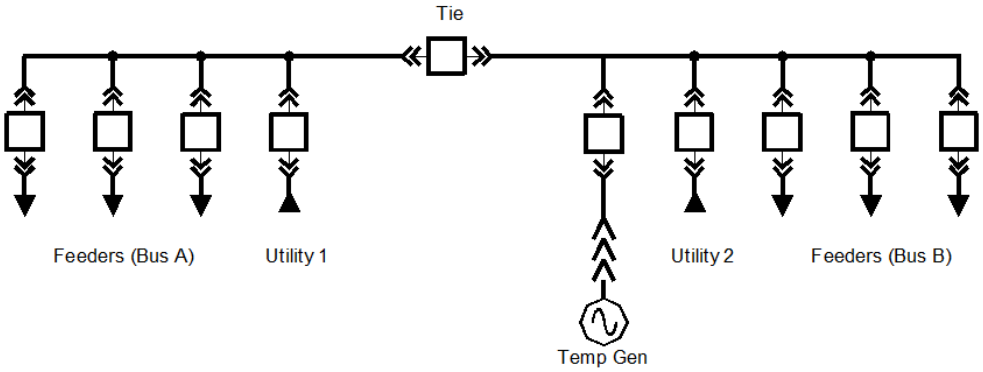

Figure 64: Two Utilities in Main-Tie-Main Switchgear with Optional Temporary Generator Quick Connection

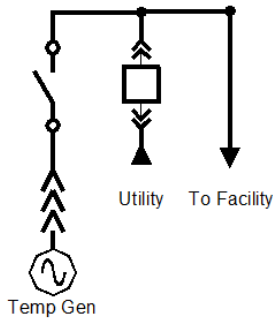

Figure 65: Utility & Temporary Generator Quick Connection Switchgear

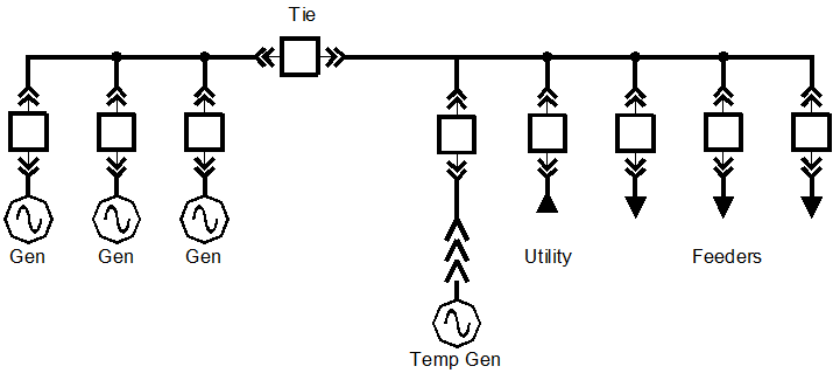

Figure 66: Utility & Emergency Generator Quick Connection with Multiple Generator Paralleling & Generator Bus Tie

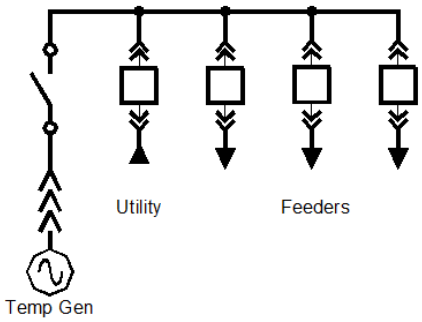

Figure 67: Utility & Emergency Generator Quick Connection with Distribution

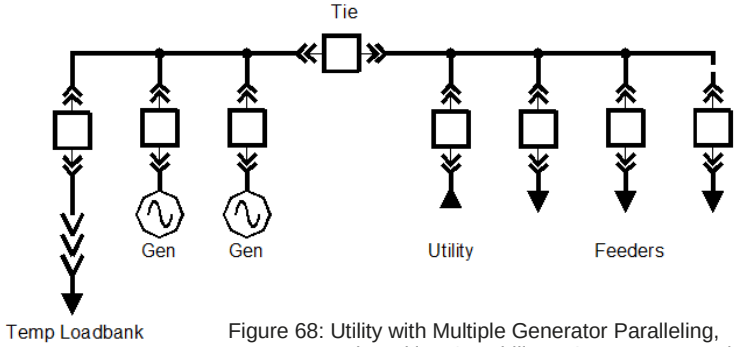

Figure 68: Utility with Multiple Generator Paralleling, Temporary Load Banking Capability & Generator Bus Tie

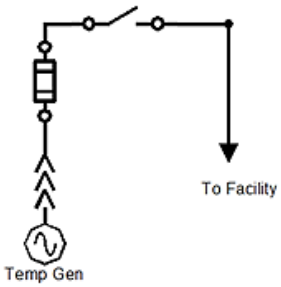

Figure 69: Medium Voltage Temporary Generator Quick Connection Switchgear

*Due to continued product improvement, products delivered may differ from what is pictured.
*Optional Equipment Features Are Often Shown in Most Figures.
*Option Availability Subject to Product Series.

APT Product Part Number Builder

Control System Modules (You Can Choose up to 10) | Options

	CM1	CM2	CM3	CM4	CM5	System Voltage (V)	System or Main Bus Ampacity (A)	Braced Withstand Rating (WR)
Example:	GP	PS	UI	UP	AV	24	1	4
Your P/N:								

	Control System Modules (CMX)
PG1	(PG1) – APT Generator Paralleling Controller
GP	(GP) – APT ACM Generator Paralleling
A2	(A2) – AdAPTor 2 Generator Paralleling
N1	(N1) – APT N+1 Redundant Generator Transfer Control
LD	(LD) – APT Load Demand Control
IM	(IM) – APT Island Mode Control
UP	(UP) – APT Utility Paralleling (Base Load)
UI	(UI) – APT Utility Intertie
PS	(PS) – APT Peak Shaving (Base Load)
IE	(IE) – APT Import/Export Control (add-on to UP/PS)
ATO	(ATO) – APT Automatic Standby Open Transfer
OT1	(OT1) – APT Model ATS-5335 Automatic Standby Open Transfer
CT1	(CT1) – APT Automatic Standby Closed Transfer - Momentary
ATC	(ATC) – APT Automatic Standby Closed Transfer - Active Sync 100ms
SL	(SL) – APT Automatic Soft-loading/Unloading
MT	(MT) – APT Manual Transfer
AR	(AR) – APT Automatic Return to Normal
NA	(NA) – APT Non-Automatic Operator Supervised Return to Normal
ATO-BI	(ATO-BI) – APT Automatic Open Transition Transfer with Bypass/Isolation
MTM	(MTM) – APT Maintenance Bypass Main-Tie-Main Operation
BI	(BI) – APT Maintenance Bypass/Isolation with Captive Key
SK	(SK) – APT Bypass/Isolation with Solenoid Key Release Unit (SKRU)
MG	(MG) – Microgrid Interconnection
LS	(LS) – APT Load Shed Control
LA	(LA) – APT Load Add Control (Bus Optimization)
EX	(EX) – External (Paralleling and/or Transfer, Load Shed) By Others
BS	(BS) – External BAS SCADA Interfacing
AV	(AV) – APTView Remote SCADA System
XX	(XX) – None/Distribution Only
	0
	0

	System Voltage (V)
24	(24) – 2.4kV
42	(42) – 4.16kV
66	(66) – 6.6kV
72	(72) – 7.2kV
11	(11) – 11kV
12	(12) – 12.47kV
13	(13) – 13.2kV
14	(14) – 13.8kV
22	(22) – 22kV
27	(27) – 27kV
35	(35) – 34.5kV

	System or Main Bus Ampacity (A)
6	(6) – 600A
9	(9) – 900A
1	(1) – 1200A
2	(2) – 2000A
3	(3) – 3000A

	Braced Withstand Rating (WR)
0	(0) – 5kA
1	(1) – 12.5kA
2	(2) – 25kA
3	(3) – 31.5kA
4	(4) – 40kA
5	(5) – 50kA
6	(6) – 63kA

*Continued on next page

*Due to continued product improvement, products delivered may differ from what is pictured.
*Optional Equipment Features Are Often Shown in Most Figures.
*Option Availability Subject to Product Series.

APT Product Part Number Builder

Options

Frequency (F)	Pole/Wire (PW)	Enclosure Type (ET)	Main/Utility Circuits (U)	Generator Circuits (G)	Tie Circuits (T)	Distribution Circuits (D)
6	34	3R	1	2	1	2

	Frequency (F)
6	(6) – 60Hz (Standard)
65	(65) – 60Hz/50Hz (Dual Rated)
5	(5) – 50Hz

	Pole/Wire (PW)
34	(34) – 3P/4W (Neutral Bus)
33	(33) – 3P/3W (No Neutral)
13	(13) – 1P/3W
23	(23) – 2P/3W
44	(44) – 4P/4W (Switched Neutral Bus)

	Enclosure Type (ET)
XX	(XX) – None/Open-Style Frame Only
1S	(1S) – NEMA 1 - Front Sheets
1D	(1D) – NEMA 1 - Front Doors
3R	(3R) – NEMA 3R
RA	(RA) – NEMA 3RX (Aluminum)
R4	(R4) – NEMA 3RX (304SS)
R6	(R6) – NEMA 3RX (316SS)
PH	(PH) – PwrHouse
PC	(PC) – PwrContainer
PS	(PS) – PwrShell
S1	(S1) – PwrSkid NEMA 1
S3	(S3) – PwrSkid NEMA 3R
T3	(T3) – Tap Box NEMA 3R
T4	(T4) – Tap Box 304SS
T6	(T6) – Tap Box 316SS

Main/Utility Circuits (U)
(0) – Main/Utility Circuit Breakers/Switches
(1) – Main/Utility Circuit Breaker/Switch/CTB
(2) – Main/Utility Circuit Breakers/Switches/CTB
(3) – Main/Utility Circuit Breakers/Switches/CTB
(4) – Main/Utility Circuit Breakers/Switches/CTB

Generator Circuits (G)
(0) – Generator Circuit Breakers/Switches/CTB
(1) – Generator Circuit Breaker/Switch/CTB
(2) – Generator Circuit Breakers/Switches/CTB
(3) – Generator Circuit Breakers/Switches/CTB
(4) – Generator Circuit Breakers/Switches/CTB
(5) – Generator Circuit Breakers/Switches/CTB
(6) – Generator Circuit Breakers/Switches/CTB

	Tie Circuits (T)
0	(0) – Bus Tie Circuit Breakers/Switches/CTB
1	(1) – Bus Tie Circuit Breaker/Switch/CTB
2	(2) – Bus Tie Circuit Breakers/Switches/CTB

	Distribution Circuits (D)
0	(0) – Feeder Circuit Breakers/Switches/CTB/Load Take-Off Bus
1	(1) – Feeder Circuit Breaker/Switch/CTB/Load Take-Off Bus
2	(2) – Feeder Circuit Breakers/Switches/CTB/Load Take-Off Bus
3	(3) – Feeder Circuit Breakers/Switches/CTB/Load Take-Off Bus
4	(4) – Feeder Circuit Breakers/Switches/CTB/Load Take-Off Bus
5	(5) – Feeder Circuit Breakers/Switches/CTB/Load Take-Off Bus
6	(6) – Feeder Circuit Breakers/Switches/CTB/Load Take-Off Bus
7	(7) – Feeder Circuit Breakers/Switches/CTB/Load Take-Off Bus
8	(8) – Feeder Circuit Breakers/Switches/CTB/Load Take-Off Bus
9	(9) – Feeder Circuit Breakers/Switches/CTB/Load Take-Off Bus
10	(10) – Feeder Circuit Breakers/Switches/CTB/Load Take-Off Bus
11	(11) – Feeder Circuit Breakers/Switches/CTB/Load Take-Off Bus
12	(12) – Feeder Circuit Breakers/Switches/CTB/Load Take-Off Bus
13	(13) – Feeder Circuit Breakers/Switches/CTB/Load Take-Off Bus
14	(14) – Feeder Circuit Breakers/Switches/CTB/Load Take-Off Bus
15	(15) – Feeder Circuit Breakers/Switches/CTB/Load Take-Off Bus
16	(16) – Feeder Circuit Breakers/Switches/CTB/Load Take-Off Bus
17	(17) – Feeder Circuit Breakers/Switches/CTB/Load Take-Off Bus
18	(18) – Feeder Circuit Breakers/Switches/CTB/Load Take-Off Bus
19	(19) – Feeder Circuit Breakers/Switches/CTB/Load Take-Off Bus
20	(20) – Feeder Circuit Breakers/Switches/CTB/Load Take-Off Bus
21	(21) – Feeder Circuit Breakers/Switches/CTB/Load Take-Off Bus
22	(22) – Feeder Circuit Breakers/Switches/CTB/Load Take-Off Bus
23	(23) – Feeder Circuit Breakers/Switches/CTB/Load Take-Off Bus
24	(24) – Feeder Circuit Breakers/Switches/CTB/Load Take-Off Bus
25	(25) – Feeder Circuit Breakers/Switches/CTB/Load Take-Off Bus
26	(26) – Feeder Circuit Breakers/Switches/CTB/Load Take-Off Bus
27	(27) – Feeder Circuit Breakers/Switches/CTB/Load Take-Off Bus
28	(28) – Feeder Circuit Breakers/Switches/CTB/Load Take-Off Bus
29	(29) – Feeder Circuit Breakers/Switches/CTB/Load Take-Off Bus

*Continued on next page

*Due to continued product improvement, products delivered may differ from what is pictured.
*Optional Equipment Features Are Often Shown in Most Figures.
*Option Availability Subject to Product Series.

APT Product Part Number Builder

Options

Portable Generator/Load Bank Quick Connection (P)	Circuit Disconnects Types (CD)	Main Bus Material (MB)	Potential Transformers (PT)	Current Transformers (CT)	Relay Brand (RB)	AC Control Power (AC)	DC Control Power (DC)
0	VD	SC	MF	4	S	15	48

	Portable Generator / Load Bank Quick Connection (P)
16	(16) – 1 x 600A Deadbreak GLQC Bushings per Phase
26	(26) – 2 x 600A Deadbreak GLQC Bushings per Phase
12	(12) – 1 x 200A Loadbreak GLQC Bushings per Phase
22	(22) – 2 x 200A Loadbreak GLQC Bushings per Phase
32	(32) – 3 x 200A Loadbreak GLQC Bushings per Phase
0	(0) – None

	Circuit Disconnects Types (CD)
VF	(VF) – VCB Stationary Mount
VR	(VR) – VCB Stationary Mount On Rollers
VD	(VD) – VCB Drawout
FA	(FA) – Fused Air Insulated Switch
UA	(UA) – Unfused Air Insulated Switch
F6	(F6) – Fused SF6 Switch
U6	(U6) – Unfused SF6 Switch
VC	(VC) – Vacuum Contactor
FM	(FM) – Fuses Only MV
IM	(IM) – Mixed (any 2+ of the above)
X	(X) – None

	Main Bus Material (MB)
SC	(SC) – Silver Plated Copper
IS	(IS) – Insulated Silver Plated Copper
TS	(TS) – Tapped Silver Plated Copper
ES	(ES) – Epoxy Coated Silver Plated Copper
TC	(TC) – Tin Plated Copper
ET	(ET) – Epoxy Coated Tin Plated Copper
X	(X) – None

	Potential Transformers (PT)
DF	(DF) – Open Delta, Fixed Mount
DD	(DD) – Open Delta, Drawout
YF	(YF) – WYE, Fixed Mount
YD	(YD) – WYE, Drawout
MF	(MF) – Mixed Open Delta & WYE, Fixed Mount
MD	(MD) – Mixed Open Delta & WYE, Drawout
X	(X) – None

	Current Transformers (CT)
1	(1) – Current Sensing Only
2	(2) – Revenue Grade CTs Only
3	(3) – Relaying & Revenue Grade CTs
4	(4) – Relaying & Differential Protection
	(5) – Relaying, Differential, Revenue Grade CTs
6	(6) – Neutral Sensing Only
X	(X) – None

	Relay Brand (RB)
S	(S) – SEL
M	(M) – GE
B	(B) – Basler
W	(W) – Beckwidth
A	(A) – ABB
E	(E) – Eaton
I	(I) – Siemens
X	(X) – None

	AC Control Power (AC)
1C	(1C) – 120VAC Customer Supplied
02	(02) – 1-1.5kVA PTs for Control Power
05	(05) – 5kVA CPT
15	(15) – 15kVA CPT
25	(25) – 25kVA CPT
37	(37) – 37.5kVA CPT
45	(45) – 45kVA CPT
11	(11) – 112.5kVA CPT
X	(X) – None

	DC Control Power (DC)
SB	(SB) – 24VDC APT Battery System
24	(24) – 24VDC Customer Supplied
48	(48) – 48VDC APT Battery System
4C	(4C) – 48VDC Customer Supplied
25	(25) – 125VDC Customer Supplied
12	(12) – 125VDC APT Battery System
50	(50) – 250VDC Customer Supplied
X	(X) – None

*Continued on next page

*Due to continued product improvement, products delivered may differ from what is pictured.
*Optional Equipment Features Are Often Shown in Most Figures.
*Option Availability Subject to Product Series.

APT Product Part Number Builder

Options

	Surge Arresters (SA)	Grounding Systems (GS)	Master Control Location (MCL)	Section Cable Entrance (EN)	Section Cable Exit (EX)
Example:	S	Z	2	RO	BO
Your P/N:					

	Surge Arresters (SA)
S	(S) – Station Class
I	(I) – Intermediate Class
D	(D) – Distribution Class
X	(X) – None

Grounding System (GS)
(S) – Solid
(L) – APT Supplied LZR-Series Low Resistance (w/NG Resistor)
(L) – Non-APT Supplied Low Resistance (w/NG Resistor)
(H) – APT Supplied HZR-Series High Impedance (w/NG T&R)
(H) – Non-APT Supplied High Impedance (w/NG T&R)
(Z) – APT Supplied SolarGround-Series (Zig-Zag) Effective Grounding
(Z) – Non-APT Supplied Effectively Grounded System
(U) – Ungrounded
(X) – Unknown

Master Control Location (MCL)
(1) – Integrated into Line-up Sections
(2) – Integrated 90° Rotated Separate Control Panel
(3) – Isolated Separate Control Panel
(X) – None

	Section Cable Entrance (EN)
TO	(TO) – Top Only
BO	(BO) – Bottom Only
RS	(RS) – Right Side Only
LO	(LO) – Left Side Only
RO	(RO) – Rear Only
TB	(TB) – Top/Bottom
LR	(LR) – Left/Right
TR	(TR) – Top-Rear
BR	(BR) – Back-Rear
BF	(BF) – Bottom-Front
SR	(SR) – Either Side/Rear
M	(M) – Mixed Line-up

	Section Cable Exit (EX)
TO	(TO) – Top Only
BO	(BO) – Bottom Only
RS	(RS) – Right Side Only
LO	(LO) – Left Side Only
RO	(RO) – Rear Only
TB	(TB) – Top/Bottom
LR	(LR) – Left/Right
TR	(TR) – Top-Rear
BR	(BR) – Back-Rear
SR	(SR) – Either Side/Rear
M	(M) – Mixed Line-up

*Continued on next page

*Due to continued product improvement, products delivered may differ from what is pictured.
*Optional Equipment Features Are Often Shown in Most Figures.
*Option Availability Subject to Product Series.

APT Product Part Number Builder

Other Options (O1-20)
AM-CI-CL-EN-IR-KX-RD

Example:

Your P/N:

*Continued on next page

	Other Options (O1-20)
X	(X) – None
1G	(1G) – 100% Ground
4G	(4G) – 40% Ground
AC	(AC) – Alternate Portable Generator Lug Connections
AM	(AM) – APT Power Metering
AR	(AR) – 120VAC Battery Charger/Convenience Receptacle
BM	(BM) – Equipment Mounted to Base
BS	(BS) – Bus Splices/Shipping Split
BT	(BT) – Bus Duct Throat
BW	(BW) – Blown Fuse Indicator & Viewing Window
CC	(CC) – Harsh Environment Conformal Coating
CD	(CD) – MV CPT Drawer for Drawout CPT(s)
CI	(CI) – SCADA Connection Interface Terminal Blocks
CL	(CL) – Convenience Light
CP	(CP) – APT Installs Customer Provided
CS	(CS) – APT Circuit Breaker Control Switch
DR	(DR) – Load Dump Receptacle/Terminal
ED	(ED) – PELT MV Draw Out CB Winch Truck
EI	(EI) – Ethernet Interface
EN	(EN) – Engraved Laminated Plastic Nameplates
ER	(ER) – Energy Reduction Maintenance Setting
FA	(FA) – Front Access Only
FD	(FD) – MV Fuse Drawer
FI	(FI) – Fiber Interface
FM	(FM) – PELT MV FAC-Series Switchgear VCB Slide Out Lift Truck
FO	(FO) – Fiber Optic Arc Flash Protection System
FP	(FP) – Fungus Proofing Treatment
GF	(GF) – APT Ground Fault Monitoring
GL	(GL) – Both Generator & Load Bank (Dual Purpose)
GS	(GS) – Grounding Studs
GT	(GT) – Ground & Test Device
HH	(HH) – Horizontal/Horizontal CB Bus
HR	(HR) – Generator Block Heater Receptacle
HS	(HS) – Space Heaters w/ Thermostat & Humidistat
HT	(HT) – Space Heaters w/ Thermostat
IB	(IB) – Incoming Service Entrance Line Isolation Barrier
IL	(IL) – Circuit Breaker Position/Status Indicating Lights
IR	(IR) – Infrared Windows
KX	(KX) – Key Interlocking (K-Kirk/S-Superior/C-Castell captive key type)
LD	(LD) – Lower Flip Door
LF	(LF) – PELT LV Folding Mobile Draw Out ICCB Removal System
LK	(LK) – Cable Lead Kit
LO	(LO) – Lock Out Relay (86)
LS	(LS) – PELT LV Top Mounted Draw Out ICCB Lifting System
LT	(LT) – Standard Circuit Breaker Lift Truck
MB	(MB) – Industrial Vinyl Mimic Bus
MC	(MC) – MOC
ML	(ML) – APT Mechanical Lugs
MW	(MW) – Mobility Caster Wheels
NR	(NR) – LV NEMA Twist-lock Receptacle
OF	(OF) – On/Off Indication Status Contacts
PA	(PA) – Remote ATS Position Annunciation
PB	(PB) – Top Mounted Cable Pull Box
PD	(PD) – CB Padlock Provisions
PF	(PF) – Ready-to-Close Contacts
PG	(PG) – Pistol Grip CB Control Handles
PK	(PK) – Pad Mount Kit
PL	(PL) – Phase Loss Relay
PM	(PM) – Phase Rotation Meter
PO	(PO) – Polished Stainless Steel
PR	(PR) – Phase Rotation Monitoring
RD	(RD) – Hinged Rear Doors
RP	(RP) – Redundant PLC
RR	(RR) – Remote Racking Device
SC	(SC) – Specified Color:
SD	(SD) – "Fault-trip" Indication Contacts
SE	(SE) – Service Entrance
SI	(SI) – Install Inverters for Skids
SL	(SL) – Specified Indication Lights
SM	(SM) – Specified Power Metering
SP	(SP) – Spare Parts
SR	(SR) – Seismic Rated (By Calculations)
SS	(SS) – SafeStop Circuit Breaker Guard
SU	(SU) – Surge Capacitor
SY	(SY) – Synchroscope
TB	(TB) – Generator Remote Start/Stop Terminal Blocks
TC	(TC) – CB Test Cabinet
TD	(TD) – Thru Door Circuit Breaker(s)
TG	(TG) – Temporary Generator Only
TI	(TI) – Modbus TCP/IP Interface
TK	(TK) – Trip Unit Test Kit
TL	(TL) – Temporary Load Bank Only
TM	(TM) – Thermal Monitoring System
TO	(TO) – TOC
TP	(TP) – Test Plugs
TR	(TR) – Bus/Cable Transition/Pull Section(s)
TS	(TS) – Test Switches
TU	(TU) – Utility Incoming Termination Cabinet Section
UC	(UC) – Utility Metering Instrumentation Cabinet Section
UM	(UM) – Utility Meter Enclosure
UR	(UR) – Undervoltage Release
VB	(VB) – Vertical Barriers Between Sections

*Due to continued product improvement, products delivered may differ from what is pictured.
*Optional Equipment Features Are Often Shown in Most Figures.
*Option Availability Subject to Product Series.

APT Product Part Number Builder

Other Options (O1-20)	Basic Impulse Level (BIL)
AM-CI-CL-EN-IR-KK-RD	95

VD	(VD) – Visible Disconnect & Isolation Switch
VH	(VH) – Vertical/Horizontal CB Bus
VV	(VV) – Vertical/Vertical CB Bus
WA	(WA) – Walk-In Enclosure Air Conditioning
WB	(WB) – Web Enabled Breakers
WC	(WC) – Control Room Desk for Walk-In Enclosure
WD	(WD) – Divider Wall for Walk-In Enclosure
WE	(WE) – Eye Wash Station for Walk-In Enclosure
WF	(WF) – Aluminum Diamond Plate Flooring
WH	(WH) – Heat for Walk-In Enclosure
WI	(WI) – Install UPS/Batteries for Walk-In Enclosure
WM	(WM) – Motorized Louvers for Walk-In Enclosure
WP	(WP) – Panel Insulation for Walk-In Enclosure
WS	(WS) – Humidistat for Walk-In Enclosure
WT	(WT) – Factory Acceptance/Witness Testing
XD	(XD) – Indoor Dry Type Power Transformer
XO	(XO) – Outdoor Oil Filled Power Transformer
XS	(XS) – Unit Substation Oil Filled Power Transformer
XL	(XL) – Extra Large Enclosure for Conduit Entry/Exit

*Head to our website or call us now for even more options to design your switchgear!

	Basic Impulse Level (BIL)
10	(10) – 10kV
30	(30) – 30kV
60	(60) – 60kV
95	(95) – 95kV
11	(11) – 110kV
12	(12) – 125kV
15	(15) – 150kV
20	(20) – 200kV

*Due to continued product improvement, products delivered may differ from what is pictured.
*Optional Equipment Features Are Often Shown in Most Figures.
*Option Availability Subject to Product Series.

About Advanced Power Technologies



Advanced Power Technologies (APT) is on the cutting edge of the latest engineered power system smart technologies, as it relates to microgrid & storage management, renewable & conventional energy source deployment, demand peak shaving, and facility back-up and co-generation power systems. Located in the central United States and headquartered in Lafayette, Indiana with solutions development engineers around the country, APT provides domestic and international products and services to industry leading companies from around the world. APT engineers have decades of power system experience from working with some of the largest companies in industry. Over the last two decades, we have produced successful solutions for hundreds of large-scale electric power projects involving utility/generator paralleling, transfer, peak shaving, and distribution. We pride ourselves in providing electrical power systems that are engineered and custom built, utilizing state-of-the-art technologies to fit our customer's exact needs. The core of our business is low & medium voltage engineered power systems for a wide range of indoor & outdoor applications, such as:

- Utility(ies) and Generator(s) Paralleling/Transfer/Peak Shaving/Distribution Switchgear
- Microgrids, Microgrid Master Control Panels, SCADA systems
- Containerized Battery Energy Storage Systems (BESS)
- Photovoltaic (PV) Solar Power Collection/Distribution & Renewable Energy Storage Systems
- Low & High Resistance Grounding Systems, Grounding Systems for Photovoltaic Effective Grounding
- High Efficiency Combined Heat and Power Switchgear & Control Systems (CHP, Co-generation)
- Outdoor Walk-In Electrical Houses (E-Houses) & Skid-Mounted Switchgear
- Motor Control Centers & Motor Control Switchgear
- Automatic & Manual Load Transfer Switchgear
- Bypass/Isolation & Power Distribution Circuit Breaker Switchboards
- Generator/Loadbank Quick Connection Switchgear, Switchboards, & Tap Boxes
- Industrial Control Panels

Please see our product webpages on www.apt-power.com for product brochures and relevant information. Actual products may look different from images shown on the website and in brochures, based on actual specifications.
APT cares and understands that each power system is different. We will evaluate various solutions to develop the best solution for a site. APT focuses on our ability to a combine several traditional pieces of equipment/functionality into as little of a footprint possible. This saves on space, the cost of equipment, cost of installation, and accomplishes the most optimal/state-of-the-art design your facilities. APT's desires to foster and grow a culture of continued open communication with each customer. Let APT be your source to provide fully engineered power system equipment solutions for the full customer facility on time, on or under budget, and in the smallest footprint possible. We are always available to assist customers and engineers representing customers in the development of complex power solutions for all facility types.

*Due to continued product improvement, products delivered may differ from what is pictured.
*Optional Equipment Features Are Often Shown in Most Figures.
*Option Availability Subject to Product Series.