ADVANCED POWER TECHNOLOGIES

NEMA 1 • Outdoor 3R • Walk-In

34.5kV, 800A, 25kA GIS-VFI Gas Insulated Vacuum Fault Interrupter Transfer & Distribution Switchgear

APTView Enabled

* Actual product appearance and configuration may vary due to ongoing product development.

AGV-Series Solutions Brochure

www.apt-power.com
1501 Veterans Memorial Pkwy E
Lafayette, IN 47905
(765) 446-2343

Volume Production

Advanced Engineered Solutions

Engineered, integrated and assembled by APT in Lafayette, Indiana, using domestic and imported components.

ALN: 574 Rev. 02

Solution Brochure Contents

Applications – Why APT Switchgear? 3

Protective Relaying Functions.....4

Lockout Relays & Test Switches 5

Power Sensing & Revenue Grade Metering 6

Utility & Generator Control/Paralleling 7

Automatic & Manual Transfer Controls.....8

Advanced SCADA Controls - APTView 9

Master Control Panel (MCP) 10

DC Control Power – Batteries & Chargers 11

Specialty 48VDC & 125VDC Systems 12

Outdoor Walk-In Switchgear Enclosures 13

APT PwrHouse – Walk-In Enclosure 14

APT PwrContainer – ISO Container Switchgear ..15

Optional Walk-In Enclosure Features 16

Application One-Line Diagrams.....17

About Advanced Power Technologies.....18

*Due to ongoing product improvements, actual delivered products may differ from the images shown.
*Optional equipment features are frequently illustrated.
*Availability of options varies by product series.

Applications

Rapid Response
Engineered to deploy fast when every second counts.

Engineered-to-Order
Tailored engineering solutions no off-the-shelf compromises.

Built for Tomorrow
Smaller, Smarter, Future-ready.

Mobile Power Solutions
Reliable power that moves you- anytime, anywhere

Figure 1a*

Figure 1b*

Next-Generation Switchgear Technology

Data Centers

- Medium Voltage (MV) Switchgear
- Low Voltage (LV) Switchgear
- Automatic Transfer & Distribution
- Engineered Control Power Cabinets

Utilities & Prime Power

- Electric Supply Substations
- Electric Substation Backup
- Water & Wastewater Treatment Plants
- LNG, Trash & Recycling Plants

Manufacturing & Industrial

- Textile
- Steel Mills
- Stamping

Generators & Backup Power

- LV & MV Quick Connections Solutions
- Permanent Gen Protection
- Permanent or Temporary Load Bank
- Temporary Generator
- Manual or Automatic Transfer
- Extended Generator Terminal Boxes

University & Medical Campuses

- Hospitals/Critical Care Centers
- Medical Clinics
- Airports, Train Stations

Mining, Oil Field Drilling, & Fracking

- Vibration Withstand
- Integrated Transformers
- Automatic Paralleling & Transfer
- Integrated Power & Controls

Renewable Energy Collection Control

- Solar, Wind, Geothermal, Biogas, Hydro
- Micro Grids & Reactors
- Energy Storage
- Education, Healthcare, & Transit

Government

- Federal, State, & Local Buildings
- Correctional Facilities
- U.S. Army & Navy Bases

The APT AGV Series is an APT-engineered GIS-based switchgear system that may incorporate GIS switching modules from qualified third-party manufacturers selected according to project requirements, availability and approved technical specifications.

Protective Relaying Functions

Figure 2*

Figure 3*

Digital Multifunction Relays

APT uses industry-leading relay brands such as SEL, GE Multilin, Basler, Beckwith, ABB, Eaton, Siemens and more for overcurrent, voltage, frequency, differential, distance, directional power and ground fault protection in the following applications:

- Utility Intertie
- Paralleling Protection
- Advanced Generator Protection
- Tie Protection
- Transformer Protection
- Feeder Protection
- Various Differential Protection Schemes

All devices are factory-labeled and documented in submittals with wiring diagrams.

Common Relaying functions

- **50/51** – Inst./Time Overcurrent
- **50N/51N** – Inst./Time Ground Overcurrent
- **27/59** – Under/Overvoltage
- **59N** – Ground Overvoltage
- **81U/81O** – Under/Overfrequency
- **25** – Synch Check
- **32** – Reverse Power
- **40** – Loss of Excitation
- **60** – Current Balance
- **67** – Directional Overcurrent
- **86** – (LO) Lock-Out Relay (Knob Grip)
- **87** – Differential Protective Relay
- **87B** – Bus Differential
- **87G** – Generator Differential
- **And More!**

*Due to ongoing product improvements, actual delivered products may differ from the images shown.
*Optional equipment features are frequently illustrated.
*Availability of options varies by product series.

Lockout Relays & Test Switches

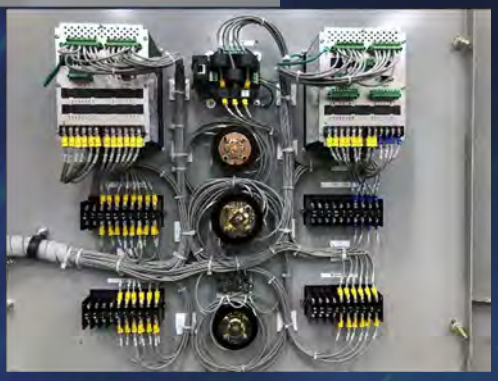

Figure 4*

Optional Test Switches & Test Plugs

- Provide a safe, simple, fast, and reliable method to isolate, test, and service installed equipment without disturbing the power system.
- Permits convenient isolation of relays, meters, and instrument transformers (PTs & CTs).
- Allows for quick and easy multi-circuit testing by conventional test methods.
- **Test Plug:** Enables easier measurement, calibration, verification and maintenance of relays, meters, PTs, & CTs.
- Conveniently connects external instruments to the same currents and voltages being applied to the panel relays and meters by the PTs, & CTs, without interrupting or short-circuiting the circuit.

Lockout 86 Function

- **Fail-Safe Design:** Designed to remain in the lockout condition until manually or electrically reset, ensuring full inspection before re-energization.
- **Knob-Grip Manual Reset:** Heavy-duty mechanical lockout relay with a manual reset knob. Activates on critical protection trips to disable automatic reclosing.
- **Visible Mechanical Target:** Red "TRIPPED" indicator shows at-a-glance breaker lockout condition.

Figure 5*

*Due to ongoing product improvements, actual delivered products may differ from the images shown.
*Optional equipment features are frequently illustrated.
*Availability of options varies by product series.

Power Sensing & Revenue Grade Metering

Figure 6*

Figure 7*

High Accuracy Power Quality Metering

METERING			
Parameters	Accuracy	Resolution	Range
Voltage	0.5%	0.1V	20V 1000kV~
Current	0.5%	0.001A	0~50000A
Current Demand	0.5%	0.001A	0~50000A
Power	0.5%	1W	-9999MW 9999MW~
Reactive Power	0.5%	1Var	-9999Mvar 9999Mvar~
Apparent Power	0.5%	1VA	0~9999MVA
Power Demand	0.5%	1W	-9999MW 9999MW~
Reactive Power Demand	0.5%	1Var	-9999Mvar 9999Mvar~
Apparent Power Demand	0.5%	1VA	0~9999MVA
Power Factor	0.5%	0,001	-1.0~1.0
Frequency	0.2%	0.01Hz	45.00~65.00Hz
Energy	0.5%	0.1kWh	0~99999999.9kWh
Reactive Energy	0.5%	0.1kvarh	0~99999999.9kvarh
Apparent Energy	0.5%	0,1 V ah	0~99999999.9kVAh
Harmonics	1.0%	0,01%	
Meter Running Time		0.1hrs	0~999999999.9hrs
Load Running Time		0.1hrs	0~999999999.9hrs

- Optional Revenue Grade
  - Active Energy Accuracy according to ANSI C12.20: Class 0.2s
- Optional Data Logging
- Optional Time of Use
- Optional Waveform Capture & Event Logging
- Optional Harmonic Resolution to the 63rd

Standard Advanced Metering Functions

- Voltage: V_A, V_B, V_C, V_{AB}, V_{BC}, V_{CA}
- Current: I_A, I_B, I_C, I_N
- Power: P_A, P_B, P_C, P_{sum}
- Reactive Power: Q_A, Q_B, Q_C, Q_{sum}
- Apparent Power: S_A, S_B, S_C, S_{sum}
- Frequency: F
- Power Factor: PF_A, PF_B, PF_C, PF
- Energy: Ep_{import}, Ep_{export}
- Reactive Energy: Eq_{import}, Eq_{export}
- Apparent Energy: Es
- Demand: Dmd_{IA}, Dmd_{IB}, Dmd_{IC}, Dmd_P, Dmd_Q, Dmd_S
- Power Quality
- Voltage Harmonics: 2nd - 31st and THD
- Current Harmonics: 2nd - 31st and THD
- Voltage Unbalance Factor: U_{unbl}
- Current Unbalance Factor: I_{unbl}
- Max/Min Statistics
- Meter Running Time and Load Running Time
- Pulse Output option
- RS485, industry standard Modbus RTU protocol
- Alarm Parameters
- Active Energy Accuracy according to ANSI C12.20: Class 0.5s

*Due to ongoing product improvements, actual delivered products may differ from the images shown.
*Optional equipment features are frequently illustrated.
*Availability of options varies by product series.

Utility & Generator Control/Paralleling

Figure 8*

Figure 9*

Figure 10*

Connect, Protect, Control

Utility Integration & Load Management

- Utility Intertie (UI)
- Utility Paralleling (UP)
  - Peak Shaving (PS)
  - Import/Export Control (IE)

Figure 11*

Figure 12*

Figure 13*

Seamless Power Continuity

Generator Paralleling & Redundancy

- ACM 5150 Paralleling Controller (PG1)
- N+1 Redundant Backup Transfer (N1)

*Due to ongoing product improvements, actual delivered products may differ from the images shown.
*Optional equipment features are frequently illustrated.
*Availability of options varies by product series.

Automatic & Manual Transfer Controls

Figure 14*

Switch Smarter, Power Safer

Automatic Transfer Systems

- Open Transition (OT2)
- Closed Transition (CT1)
- Soft loading & Unloading (SL1)
- Automatic Return to Normal (AR) – Standard
- Operator-Supervised Return (NA) – Optional

Figure 15*

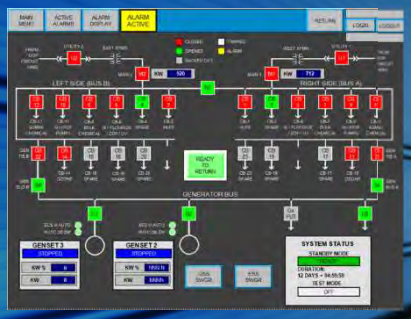

Figure 16*

Figure 17*

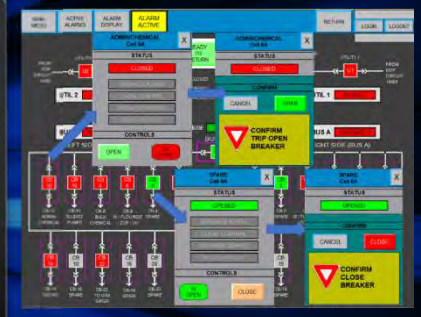

Figure 18*

Figure 19*

Safe Maintenance, Minimized Downtime

Maintenance & Bypass Isolation

- Main-Tie-Main Operation (MTM)
- Automatic Bypass (ATO-BI)
- Manual Bypass/Isolation (BI)
- Manual Transfer (MT) w/Captive Key Interlocking
- Solenoid Key Release Bypass (SK)

*Due to ongoing product improvements, actual delivered products may differ from the images shown.
*Optional equipment features are frequently illustrated.
*Availability of options varies by product series.

Advanced SCADA Controls - APTView

Demand Control, Simplified

Advanced Load Management
- Load Shed Prioritization (LSC)
- Load Add Control (LAC)
- Load Demand Optimization (LDC)

Figure 20*

Figure 21*

Advanced Master Control

20” minimum Touchscreen Display
Microgrid & Island Mode Capabilities
- Black Start for Turbines
- Island Mode Control (IM)
- Microgrid Integration (MG)

APT VIEW ENABLED

APT View ENABLED

APTView Enabled

Control From Anywhere, Anytime

SCADA & Remote Management
- APTView Remote SCADA (AV)
- External BAS Integration (BSI)

Figure 22*

*Due to ongoing product improvements, actual delivered products may differ from the images shown.
*Optional equipment features are frequently illustrated.
*Availability of options varies by product series.

Master Control Panel (MCP)

Figure 23*

Figure 24*

Figure 25*

Master Control Panel Benefits

- Provides for the central point of control and monitoring of an entire system and interfaces with control systems at other locations.
- Configurable for control of incoming/outgoing utilities, tie breakers, generation sources, and load feeders for the ultimate in control flexibility.
- Customizable for any system/requirements.
- Provides events logging and automatic responses to changing conditions.
- Integrates the various pieces defined in other documents and makes them a system.
- Allows for full operational control and monitoring while keeping the operator outside of the arc-flash zone.
- Uninterruptable Power Supply keeps unit powered during unplanned outages

APT Intelligent Master Control Features and Parameters

- Monitoring of generator, utility and load electrical data:
  - Line to line voltages: Vab, Vbc, Vca
  - Source frequency: Hz
  - Phase currents: Ia, Ib, Ic
  - 3Ø power: kW, PF, kVAR, kVA
  - 3Ø energy: kWh import, kWh export, kVARh import, kVARh export
- Bus electrical data:
  - Line to line voltages: Vab, Vbc, Vca
  - Bus Frequency: Hz
- System Status Information (alarm and events log):
  - Source and Feeder circuit breakers position
  - Circuit breaker control switch in Trip position
  - Protective relaying trip
  - Battery charger alarms

*Due to ongoing product improvements, actual delivered products may differ from the images shown.
*Optional equipment features are frequently illustrated.
*Availability of options varies by product series.

DC Control Power – Batteries & Chargers

Comprehensive Switchgear Station Battery Systems

Whether you have an existing switchgear station battery system or are looking to purchase one, APT offers flexible battery solutions across multiple chemistries and voltages (24VDC, 48VDC, and 125VDC), tailored to your project's specific requirements and preferences.
Our standard 24 VDC battery system solutions deliver exceptional reliability, minimal maintenance, and robust performance, complemented by advanced integrated battery chargers designed specifically for our medium voltage (2.4kV–38kV, 3Ø) switchgear applications.

APT 24 VDC Switchgear Battery System Features

- **Maintenance-Free Operation:** Fully sealed, eliminating routine electrolyte checks.
- **Reliable High-Current Delivery:** Stable and dependable current for breaker trip/close and protective relay functions.
- **Compact Design:** Optimized for installations where space is limited.
- **High Efficiency & Fast Recharge:** Quick recovery to full capacity following discharge events.
- Standard Voltage: **24 VDC**

Optional Enhanced Features (Available Upon Request)

- **Extended Lifecycle:** Long-lasting performance with minimal degradation.
- **Advanced Battery Management System (BMS):** Real-time diagnostics, automated balancing, and continuous health monitoring & alarm status.
- **Ultra-Compact & Lightweight Construction:** Further reduced space requirements and ease of installation.
- **Enhanced Cycle Life & Longevity:** Superior long-term performance for demanding applications.
- Optional: **48 VDC, 125 VDC** upon request.

Figure 26*

*Due to ongoing product improvements, actual delivered products may differ from the images shown.
*Optional equipment features are frequently illustrated.
*Availability of options varies by product series.

Specialty 48VDC & 125VDC Systems

Nickel-Cadmium (NiCd) Rugged Reliability

- **Extreme Temperature Tolerance:** Excellent performance from -40°C to +50°C, ideal for harsh outdoor installations.
- **Long Service Life:** Robust construction delivers 15–25+ years of dependable service.
- **High Discharge Resilience:** Exceptional performance during deep discharge cycles and rapid recovery capability.
- **Maintenance Considerations:** Moderate routine maintenance (periodic electrolyte replenishment) balanced by exceptional reliability and lifecycle cost-effectiveness.
- **Advanced features supplied as required**

Figure 27*

Flooded Lead Acid (FLA) Proven Performance

- **Reliable, Proven Technology:** Long-established battery type delivering predictable performance and dependable service over 15–20 years.
- **High Current Capability:** Handles high instantaneous currents for breaker operations effectively.
- **Routine Maintenance:** Requires periodic electrolyte checks, watering, and maintenance, suitable for installations with structured maintenance resources.

Lead Selenium (PbSe) Premium Longevity

- **Extended Lifecycle:** Proven 15–20+ years of service life with excellent cycling capability.
- **Reduced Maintenance:** Low-maintenance vented battery type, fewer watering intervals than standard flooded cells.
- **Enhanced Thermal Stability:** Reliable in demanding environments with temperature fluctuations.
- **High-Rate Discharge:** Strong, stable current output ideal for breaker tripping and high load demands.

*Due to ongoing product improvements, actual delivered products may differ from the images shown.
*Optional equipment features are frequently illustrated.
*Availability of options varies by product series.

Outdoor Walk-In Switchgear Enclosures

Engineered Precision, Delivered Performance

APT's **PwrHouse** and **PwrContainer** enclosures deliver industry-leading reliability, flexibility, and rapid deployment capabilities. Each solution is fully customizable to precisely meet your specific site and operational requirements, ensuring robust performance for critical power infrastructure.

Figure 28*

Figure 29*

Custom Modular Enclosures: Built for Specialization

PwrHouse:

- Tailored dimensions and modular flexibility to application-specific requirements.
- Fully integrated switchgear delivered ready for rapid commissioning.
- Robust construction adhering to stringent structural and environmental standards.
- Galvanized steel structure.
- Kynar 500 coated galvalume panels.
- Eliminates the need for shipping splits with compact, integrated switchgear design.
- Optional enhancements for critical operational conditions.

ISO Container Enclosures: Compact, Mobile, & Ready

PwrContainer:

- 20', 40', 45' ISO container-based, engineered for portability and immediate operational readiness.
- Ideal for rapid global deployment.
- Factory integrated switchgear and equipment in one self-contained unit significantly reducing on-site installation time.
- Easily Transportable by standard logistics networks: truck, rail, or ship.
- Optional features to withstand marine-grade environments, extreme seismic events, and Category 5 hurricanes available upon request.
- Optional Enhanced Marine-grade reinforced structural integrity with corrosion-resistant finishes and integrated environmental control.

*Due to ongoing product improvements, actual delivered products may differ from the images shown.
*Optional equipment features are frequently illustrated.
*Availability of options varies by product series.

APT PwrHouse – Walk-In Enclosure

Custom-Built Durability and Integration

APT's **PwrHouse** walk-in enclosures are meticulously engineered and factory-integrated to ensure structural integrity, durability, and simplified onsite deployment, explicitly designed to accommodate critical electrical systems safely and efficiently.

Figure 30*

Precision Engineered Modular Solutions

- **Robust Structural Integrity:**
  - Galvanized structural steel framing exceeding building code requirements.
  - ASTM A36 steel base ensures structural integrity for lifting and placing fully loaded enclosures.
  - Multi-rib panels with Kynar 500 finish, offer superior corrosion resistance.
  - Standing-Seam Metal Roof with UL 580 Class 90 Roof Uplift Certification.
- **Enhanced Safety & Comfort:**
  - Insulated steel doors with heavy-duty stainless-steel hinges and panic hardware.

Factory-Built for Rapid Onsite Deployment

- **Flexible Sizing & Rapid Deployment:**
  - Delivered fully integrated with no field assembly of internal components needed.
  - Compact design streamlines logistics, reduces installation time, and accelerates commissioning.
- **Compliance and Excellence:**
  - Detailed, accurate submittal documentation streamlines project approvals, reduces engineering, and installation risks.

*Due to ongoing product improvements, actual delivered products may differ from the images shown.
*Optional equipment features are frequently illustrated.
*Availability of options varies by product series.

APT PwrContainer – ISO Container Switchgear

Rapid, Efficient, & Robust Deployment

Engineered within ISO-certified sea-worthy containers, APT's **PwrContainer** enclosures offer unmatched portability, rapid deployment, and comprehensive environmental resilience for permanent & temporary global urban & rural operations and emergency response scenarios.

Figure 31*

Rugged, Robust Design ISO Container-Based Design

- **Superior Mobility and Reliability:**
  - Modified ISO shipping containers (20', 40', 45') allow international mobility, ideal for permanent, temporary, emergency, urban, or remote sites.
  - Eliminates onsite assembly; containers arrive fully tested and ready to operate immediately upon placement and acceptance testing.
- **Optional Marine-Grade Construction & Protection:**
  - Heavy-duty, reinforced steel framing and structural floor replacement ensures seismic stability and Category 5 hurricane resistance.
  - Corrosion-resistant marine-grade paint provides exceptional durability and heat deflection.

Fully Integrated Plug-and-Operate System

- **Enclosure Features:**
  - Insulated personnel doors with quick-escape panic hardware.
  - Closed-cell polyurethane foam insulation protects internal equipment from temperature extremes and condensation.
- **Integrated Systems and Optional Features:**
  - For additional customizable features such as corrosion-resistant coatings, HVAC redundancy, marine-grade protections, and advanced operational safety enhancements, please see the comprehensive list of optional features provided on the following page.

*Due to ongoing product improvements, actual delivered products may differ from the images shown.
*Optional equipment features are frequently illustrated.
*Availability of options varies by product series.

Optional Walk-In Enclosure Features

Tailored Optional Features

Customize your APT Walk-In Enclosure with specialized enhancements designed to maximize performance, reliability, safety, and adaptability for your exact operational needs.

Figure 32*

Figure 33*

Environmental Control & Interior Options

- (WA) – Climate-Controlled HVAC Systems (Heating, AC, Humidity Control)
- (WR) – Redundant Dual HVAC Systems with Automatic Lead-Lag Changeover
- (WH) – Anti-Condensation Aisle Strip Heating
- (WS) – Humidity Control System with Integrated Humidistat
- (WM) – Motorized Louvers for Optimized Ventilation
- (WN) – Corrosion-Resistant HVAC Coils
- (WL) – Enhanced Interior LED Lighting (≥300 lux)
- (WF) – Aluminum Diamond Plate Flooring
- (WK) – Non-Skid Epoxy Flooring

Optional Additions & Features Available

- (RD) – Rear Access Doors
- (WW) – Hinged Wireway
- (WC) – Cable Tray
- (WE) – Eye Wash Station
- (WU) – Corrosion-Resistant Aluminum Panels (PwrHouse Only)
- (WV) – Marine-Grade Corrosion Protection
- (WP) – Advanced Panel Insulation
- (WI) – Install UPS/BESS System
- (WD) – Control Room Desk
- (WJ) – Interior Divider Wall
- (WG) – Arc-Gas Venting Plenum System
- (WO) – Overhang Over Entrance Doors
- And more!

Sample Application One-Line Diagrams

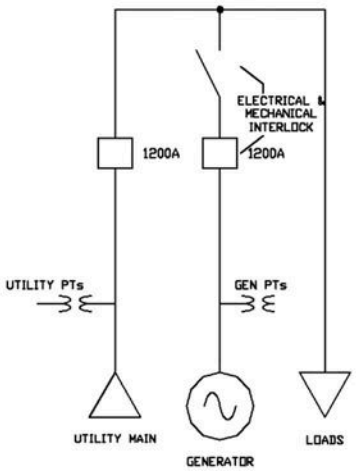

Figure 34*

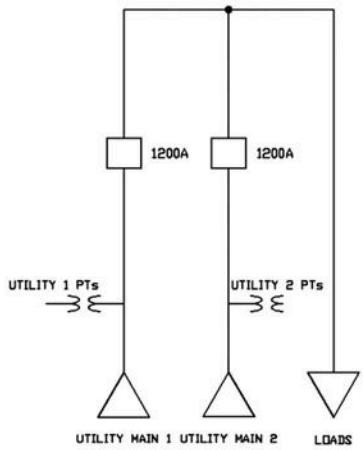

Figure 35*

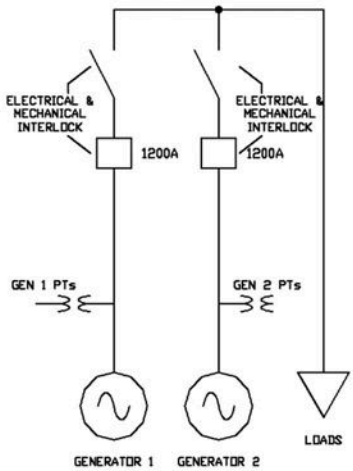

Figure 36*

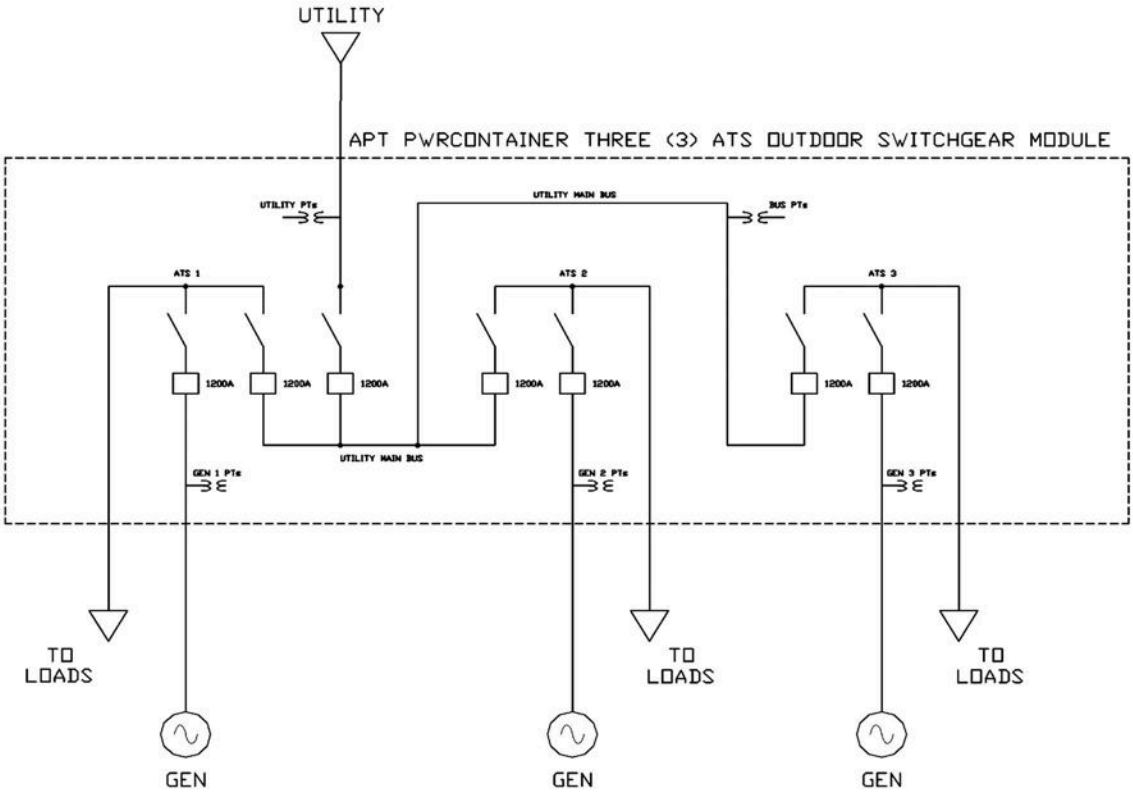

Figure 37*

*Due to ongoing product improvements, actual delivered products may differ from the images shown.
*Optional equipment features are frequently illustrated.
*Availability of options varies by product series.

About Advanced Power Technologies

Advanced Power Technologies (APT) is a leading innovator in engineered low and medium voltage power systems, delivering customized solutions worldwide. From our strategically central headquarters in Lafayette, Indiana, we design and manufacture precision-crafted switchgear, switchboards, and electrical infrastructure systems.

Decades of Expertise, Customized Solutions
Our skilled engineering team brings extensive experience across industries such as utilities, data centers, healthcare, agriculture, education, and commercial manufacturing. Leveraging cutting-edge switchgear technologies, we specialize in:

- 208V-800VAC Switchgear & Switchboards
- 2.4kV-38kV Custom Metal Enclosed/Clad Style Switchgear
- Generator Enclosure Package Integrated Equipment
- Utility and Generator Paralleling, Transfer, Peak Shaving & Distribution Switchgear
- Automatic & Manual Load Transfer Switchgear
- Outdoor Walk-In Electrical Houses (E-Houses) & Skid-Mounted Switchgear
- Containerized Switchgear & Battery Energy Storage Systems (BESS)
- Generator/Load Bank Quick Connection Switchgear, Switchboards, & Tap Boxes
- Microgrids, Master Control Panels, SCADA Systems
- Low & High Resistance Grounding Systems
- Bypass/Isolation & Power Distribution Circuit Breaker Switchboards
- Photovoltaic (PV) Solar Power Collection & Renewable Energy Storage Systems
- Motor Control Centers & Motor Control Switchgear
- High Efficiency Combined Heat and Power (CHP, Co-generation) Switchgear & Control Systems
- Industrial Control Panels

Precision Manufacturing & Innovation
APT provides in-house precision metal fabrication, engineering, integration and assembly capabilities in Lafayette, Indiana, using domestic and imported components. As an OEM partner with industry leaders like Siemens, Square D, ABB, LG, and Eaton/Cutler Hammer, we integrate superior components into every system.

Flexible, Efficient, Scalable Solutions
APT provides highly flexible solutions with efficient production processes and scalable manufacturing capacities, tailored specifically to meet the demands of high-volume customers. Our capabilities position us ideally to serve large-scale operations including oil and gas producers, large data centers, extensive solar portfolios, and projects specified by leading engineers and facility managers.

Compact, Efficient, Reliable
APT excels at optimizing facility footprints and reducing installation costs through innovative, space-efficient designs. Each project benefits from our collaborative approach, open communication, and relentless commitment to customer success.
Discover more at www.apt-power.com, and let APT engineer the perfect power solution for your facility.