APT
ADVANCED POWER TECHNOLOGIES

NEMA 1 • Outdoor 3R • Walk-In

15kV-38kV Class High-Performance ANSI/IEEE Medium Voltage Switchgear

APTView Enabled

MEX-Series
Beyond Traditional Metal Enclosed Switchgear

Solutions Brochure

www.apt-power.com
1501 Veterans Memorial Pkwy E
Lafayette, IN 47905
(765) 446-2343

Volume Production
Advanced Engineered Solutions

MADE IN THE USA

ALN: 575 Rev. 02

Solution Brochure Contents

Applications – Why APT Switchgear? 3
NextGen Construction & Ratings.....4
Utility & Generator Sections.....5
Tie & Distribution Sections.....6
Withdrawable Vacuum Circuit Breakers.....7
Vacuum Circuit Breakers (VCB) Ratings 8
Withdrawable Cell & VCB Removal.....9
Fixed Mount Vacuum Circuit Breakers (VCBs)....10
Vacuum Interrupters & Cable Connections 11
Air Insulated Load Break Switches.....12
Innovative Main Bus.....13
Phase Barriers/Bus Segregation/Insulation 14
Instrument Transformers – PTs, CTs 15
Flexible Voltage Sensing Drawers.....16
Protective Relaying Functions.....17
Lockout Relays & Test Switches 18
Power Sensing & Revenue Grade Metering 19
Utility & Generator Control/Paralleling 20
Automatic & Manual Transfer Controls.....21
Advanced SCADA Controls - APTView 22
Master Control Panel (MCP) 23
AC Control Power – CPTs.....24
DC Control Power – Batteries & Chargers 25
Specialty 48VDC & 125VDC Systems 26
Switchgear Surge Arresters 27
Surge Capacitors and RC Snubbers.....28
Outdoor Walk-In Switchgear Enclosures 29
APT PwrHouse – Walk-In Enclosure 30
APT PwrContainer – ISO Container Switchgear ..31
Optional Walk-In Enclosure Features 32
Application One-Line Diagrams.....33
About Advanced Power Technologies.....34

Figure 1*

Figure 2*

*Due to ongoing product improvements, actual delivered products may differ from the images shown.
*Optional equipment features are frequently illustrated.
*Availability of options varies by product series.

Applications – Why APT Switchgear?

Rapid Response
Engineered to deploy fast when every second counts.

Engineered-to-Order
Tailored engineering solutions no off-the-shelf compromises.

Built for Tomorrow
Smaller, Smarter, Future-ready.

Mobile Power Solutions
Reliable power that moves you-anytime, anywhere

Figure 3*

Next-Generation Switchgear Technology for Use In

Data Centers

- Medium Voltage (MV) Switchgear
- Low Voltage (LV) Switchgear
- Automatic Transfer & Distribution
- Engineered Control Power Cabinets

Utilities & Prime Power

- Electric Supply Substations
- Electric Substation Backup
- Water & Wastewater Treatment Plants
- LNG, Trash & Recycling Plants

Manufacturing & Industrial

- Textile
- Steel Mills
- Stamping

Generators & Backup Power

- LV & MV Quick Connections Solutions
- Permanent Gen Protection
- Permanent or Temporary Load Bank
- Temporary Generator
- Manual or Automatic Transfer
- Extended Generator Terminal Boxes

University & Medical Campuses

- Hospitals/Critical Care Centers
- Medical Clinics
- Airports, Train Stations

Mining, Oil Field Drilling, & Fracking

- Vibration Withstand
- Integrated Transformers
- Automatic Paralleling & Transfer
- Integrated Power & Controls

Renewable Energy Collection Control

- Solar, Wind, Geothermal, Biogas, Hydro
- Micro Grids & Reactors
- Energy Storage
- Education, Healthcare, & Transit

Government

- Federal, State, & Local Buildings
- Correctional Facilities
- U.S. Army & Navy Bases

*Due to ongoing product improvements, actual delivered products may differ from the images shown.
*Optional equipment features are frequently illustrated.
*Availability of options varies by product series.

APTNextGen Architecture & Ratings

APT's Next-Generation Medium Voltage Switchgear Platform Architecture Replaces Traditional Metal-Clad

Figure 4*

Figure 5*

Compact Metal Enclosed Withdrawable Vacuum Circuit Breaker Switchgear for Tomorrow's Critical Infrastructure

High-Density Design

Vacuum Circuit Breakers: Available in both fixed and withdrawable configurations, providing fast fault interruption, high reliability, and low maintenance requirements

Load Interrupter Switches: Provide reliable switching with visible isolation, with fault protection supplied by upstream devices or integrated fuse protection

Optimized Section Dimensions: Section dimensions increase with voltage class to maintain required insulation clearances and dielectric performance.

15 kV Class:
Fixed Mount: 36" W × 36" D
Withdrawable: 36" W × 36" D (1 High)
Withdrawable: 36" W × 55" D (2 High)

27 kV Class:
Fixed Mount: 48" W × 80" D
Withdrawable: 48" W × 127" D

38 kV Class:
Fixed Mount: 55" W × 80" D
Withdrawable: 55" W × 127" D

Specification	Ratings & Options
Nominal Voltage	14.4 kV – 34.5 kV
Interrupting Capacity	25 kA, 31.5 kA, 40 kA, 50* kA
Main Bus Ampacity	600 – 4000* A
Bus Insulation Options	Standard: Bare Optional: Insulated
Operation Modes	Manual, Automatic Open Transition, Automatic Closed Transition, Delayed, Soft Loading, Parallel
Transfer/Control Configurations	Utility-to-Generator, Utility-to-Utility, Generator-to-Generator, 3-Way
Circuit Disconnect Types	Withdrawable Vacuum Circuit Breaker, Fixed Mount Vacuum Circuit Breaker, Air Insulated Load Break Switch
Reference Standards	ANSI/IEEE: C37.20.3, C37.04, C37.06

Flexible & Durable Enclosure Options

Standard Indoor: NEMA 1
Weatherproof Outdoor: NEMA 3R Non-Walk-In (stainless hardware, pad-lockable doors)
APT PwrSkid: Outdoor Non-Walk-In Skid-Mounted

Walk-in Solutions:
APT PwrContainer: Compact Containerized Outdoor Walk-In Enclosure
APT PwrHouse: Outdoor Walk-In Enclosure

Material & Finish Options:
Carbon Steel, Aluminum, Stainless Steel (304 & 316)
Powder-coated ANSI 61 Gray or the color of your choice!

* - may not be available for all voltage classes or configurations

*Due to ongoing product improvements, actual delivered products may differ from the images shown.
*Optional equipment features are frequently illustrated.
*Availability of options varies by product series.

Utility & Generator Sections

Simple To Service Modular Compartmentalized Switchgear

Our modular switchgear design is meticulously engineered for serviceability, reliability, and simplified integration, compliant with IEEE/ANSI, and component UL standards. Each specialized section is optimized and compartmentalizable to meet your exact application requirements.

Figure 6*

Incoming Main & Utility Intertie Feed Sections

- **Rated Voltage:** Up to 38kV, ensuring compatibility and safety with your utility grid.
- **Circuit Breakers:** Vacuum circuit breakers (VCBs) with withdrawable capability, simplifying maintenance and providing visible disconnect for operational safety.
- **Precision Instrumentation:** Integrated current transformers (CTs) and voltage transformers (PTs) configured for precise metering, monitoring, and protection.
- **Safety & Reliability:** Engineered with robust mechanical interlocks and clearly defined operational positions for maximum safety.

Incoming Generator Sections

- **Enhanced Paralleling Capabilities:** State-of-the-art synchronizing equipment for seamless integration and paralleling of generators.
- **Flexible Breaker Configurations:** Fully withdrawable VCBs rated for continuous operation and quick maintenance.
- **Advanced Protection:** Comprehensive relay and protective systems safeguard generator integrity and ensure fault tolerance.
- **Maintenance Ease:** Optimized compartment design provides easy access to critical components, minimizing downtime.

*Due to ongoing product improvements, actual delivered products may differ from the images shown.
*Optional equipment features are frequently illustrated.
*Availability of options varies by product series.

Tie & Distribution Sections

Utility Bus Isolation Tie, Multi-Gen Bus Tie, Main-Tie-Main Sections

- **Robust Source Transfer:** Designed for dependable automatic or manual transfer between multiple power sources without service interruption.
- **Seamless Controls:** Equipped with intelligent transfer controllers capable of automatic and fast switching between the power sources.
- **Digital Integration:** Advanced digital relaying and metering enhance system monitoring and fault identification, improving uptime.
- **Maximum Flexibility:** Designed to accommodate various operational and expansion scenarios seamlessly.

Distribution Feeder Sections

- **Flexible Power Distribution:** Optimized layout to ensure efficient and secure distribution to downstream loads.
- **Comprehensive Protection:** Integrated CTs and PTs, meticulously engineered for accuracy and reliability in protection schemes and power management.
- **Expandability:** Future-ready provisions included, facilitating easy upgrades or expansions as your needs evolve.
- **High Short-Circuit Withstand:** Engineered internal bus bars with exceptional thermal and mechanical stress resilience.

Figure 7*

Easy Integration & Planning

- Detailed dimensional layouts, clear equipment labeling, and precise technical drawings provided, ensures a straightforward submittal approval process, with revisions as required to ensure compliance with the project intent.
- Choose reliable delivery, flexibility, and performance — choose APT Switchgear solutions for your critical power infrastructure.

Figure 8*

*Due to ongoing product improvements, actual delivered products may differ from the images shown.
*Optional equipment features are frequently illustrated.
*Availability of options varies by product series.

Withdrawable Vacuum Circuit Breakers

Maximum Flexibility, Rapid Maintenance Replacement

Engineered for seamless power system integration, our VCB combines a next generation compact Vacuum Circuit Breaker technology with our innovative compact withdrawable switchgear cells to ensure reliability, ease of maintenance and operational flexibility.

Figure 9*

Operational Simplicity for Frequently Maintained Systems

- **Withdrawable Removable Vacuum Circuit Breakers:** Provides visible disconnect of primary circuit to provide maintenance service on all types of downstream load equipment.
- **Integral Manual Charging Handle:** Allows for manual operation, ensuring ease of use without reliance on complex systems.
- **Test Position:** Allows for testing of every aspect of the circuit breaker manual and electrical operation (trip, charge, close, position contacts, etc.) while circuit breaker's primary terminals are fully disconnected from the switchgear cell.
- **Operation by any universal disconnect head hot stick** for operational flexibility, simplicity and enhanced operator safety. 4' hot stick is included with switchgear.

Safety Mechanisms for Mission-Critical Applications

- **Mechanical Interlocks:** Prevent withdrawal or insertion of the circuit breaker when main contacts are not open, ensuring operator safety.
- **Intermediate Position Lockout**: Breaker cannot be electrically or mechanically closed unless it is in fully connected or fully disconnected (in Disconnected or Test position), preventing unsafe operations.
- **Automatic Shutters:** Automatically cover primary connections when the circuit breaker is in Disconnected or Test position, or removed from the cell, reducing operator's exposure to live parts.
- **Stop bumpers:** Prevent circuit breaker from accidental rolling out of the cell on to the operator, when in Test/Disconnected Position.

*Due to ongoing product improvements, actual delivered products may differ from the images shown.
*Optional equipment features are frequently illustrated.
*Availability of options varies by product series.

Vacuum Circuit Breakers (VCB) Ratings

Figure 10*

Figure 11*

Ratings and Features

Maximum Voltages, kV	4.76, 15, 38**
Power Frequency Withstand (1 minute), kV	19, 36, 80**
BIL, kV	60, 95, 170**
Continuous Current – Circuit Breakers, A	600, 800, 900, 1200, 2000, 3000**, 4000**
Continuous Current – Main Bus, A	600 - 4000
Interrupting Capacity – symmetrical, kA	25, 31.5, 40**, 50**
Short time withstand, 2 seconds, kA	25, 31.5, 40**, 50**
Mechanical endurance, operations	10,000 (class M2 per IEEE C37.04 C37.06)
Interrupting Time	3 cycles
Opening Time	Less than 40ms

** Requires increased switchgear depth

- **High-Speed Operation:** Fault clearing in under 3 cycles with performance matching or exceeding industry-leading breakers, optimized for simplicity.
- **Rated Operation Sequences:**
  - O-0.3s-CO-15s-CO
  - O-0.3s-CO-3min-CO
  - O-3min-CO-3min-CO
- **Mechanisms and Interlocks:** Manufactured from stainless steel and other metals ensure reliable operation and ease of repairs.
- **Insulation:** No reliance of custom moldings or extrusions. Industry standard readily available insulation type and shapes used in construction.
- **Captive Key Mechanical Interlocking:** Multiple provisions and options available.

*Due to ongoing product improvements, actual delivered products may differ from the images shown.
*Optional equipment features are frequently illustrated.
*Availability of options varies by product series.

Withdrawable Cell & VCB Removal

Additional VCB Cell Features

- **Shutters:** When the breaker is removed, the shutters automatically close, separating the compartment from energized components
- **Grounded Metal Compartments:** All live parts are enclosed in grounded metal compartments; the breaker frame remains grounded during levering and in the connected position, enhancing safety.
- **Front Accessible Breaker Secondaries:** Front accessible circuit breaker secondary connectors and harness provides visual assurance of secure secondary connections and easy access for maintenance and inspection.

Figure 13*

Figure 12*

Vacuum Circuit Breaker Removal*

- Locks into switchgear section frame and circuit breaker cell, allows to roll out and secure the circuit breaker outside of the switchgear cell
- Keeps circuit breaker secure in place to allow complete out of cell inspection without complete removal.
- Allows for use of conventional lifting devices including common engine lift/hoist to safely remove circuit breaker from the section and lower it to the floor.

*Due to ongoing product improvements, actual delivered products may differ from the images shown.
*Optional equipment features are frequently illustrated.
*Availability of options varies by product series.

Fixed Mount Vacuum Circuit Breakers

Figure 14*

Figure 15*

Single & Two High Vacuum Circuit Breaker Section

- Fixed-mount vacuum circuit breakers are commonly used in distribution systems where reliable protection is required but breaker removal is not required during normal operation.
- Used in stable distribution systems where breakers remain installed for long service intervals.
- **Simplified Mechanical Operation:** Directly fixed mounted breakers eliminate racking systems and reduces the number of moving components, which reduces mechanical complexity while retaining the fast fault clearing and long service life of vacuum interrupter technology.
- **Resettable Protection for Rapid System Restoration:** Unlike fuse-protected feeders, vacuum circuit breakers can be reset after a trip, allowing operators to investigate and restore power without replacing fuses.
- **Improved Fault Diagnostics and Troubleshooting:** Protection relays and breaker trip indications provide valuable information following a fault event, helping operators determine the cause of the trip before returning equipment to service.
- **Reduced Downtime Compared with Fuse-based Protection:** Systems using fuses require replacement after operation, while circuit breakers allow controlled reclosing once the fault condition has been evaluated.
- **Compact Switchgear Configurations:** Fixed breakers can reduce switchgear depth and allow for back-to-back and two high arrangement sections.
- **Optional Visible Isolation When Required:** Where operational procedures require a visible disconnect, fixed VCB sections can be combined with an in-line load break or dead break isolation switch.

*Due to ongoing product improvements, actual delivered products may differ from the images shown.
*Optional equipment features are frequently illustrated.
*Availability of options varies by product series.

Vacuum Interrupters & Cable Connections

Figure 16*

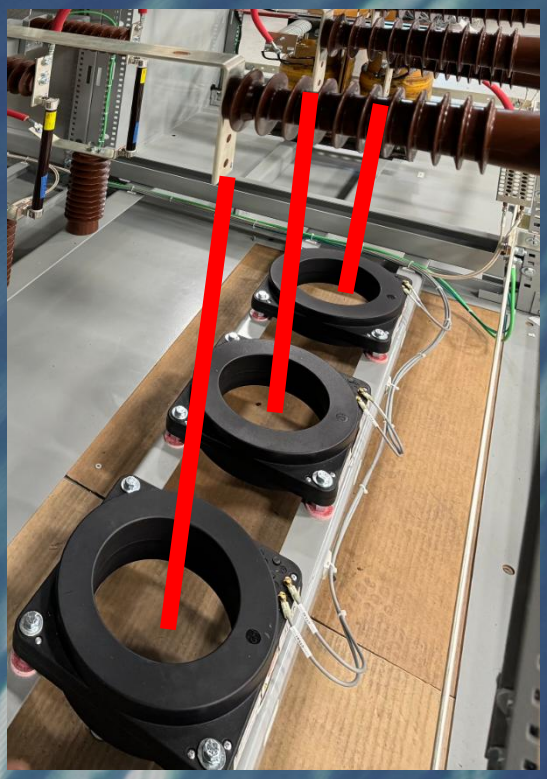

Figure 16A*

Reliable Interruption & Long-Life Contacts

- **Hermetically Sealed Vacuum Interrupters:** Ensure extinguishing of the arc and protect contacts from contamination, extending the lifespan of the breaker.
- **Copper-Chromium Vacuum Interrupter Contacts:** Provide superior dielectric withstand, very low contact resistance and low contact wear, ensuring reliable operation.
- **Low Arc Energy During Interruption:** Vacuum switching technology confines the arc within a sealed interrupter chamber, reducing energy dissipation.

CT Installation Access & Available Schemes

- Shielded Power Cables Pass Through the Current Transformers installed on feeder cables or bus conductors to provide real-time current measurement for protection relays, metering, and system monitoring.
- Flexible Protection Architectures: CT inputs allow protection schemes to trip associated breaker or upstream main breaker/protective device when abnormal conditions are detected on downstream VCB or LIS circuits.

*Due to ongoing product improvements, actual delivered products may differ from the images shown.
*Optional equipment features are frequently illustrated.
*Availability of options varies by product series.

Air Insulated Load Break Switches

Figure 17*

Figure 18*

Fused & Unfused Air Insulated Load Breaking Switches

- Air-insulated load break switches provide a straightforward and dependable method for switching distribution circuits. These devices are commonly used where feeder switching and visible isolation are required, while primary fault protection is provided either by upstream devices or integrated fuse protection.
- Fuse-protected feeder configurations available for load break switches to provide effective transformer feeder protection.
- **Ideal for Transformer Feeder Switching Applications:** Load break switches are frequently used on transformer primaries, distribution feeders, and circuits where routine switching and isolation are required.
- **Clear Operational Separation Between Protection and Switching Functions:** Protection is provided by fuses or upstream breakers, while the switch provides reliable manual load switching and visible isolation.
- **Simple and Reliable Load Switching:** Stored-energy mechanisms rapidly open and close the switch contacts, allowing safe interruption of normal load current for feeders and transformer circuits.
- **Visible Blade Isolation for Maintenance Procedures:** Operators can visually verify that the circuit is open, providing clear confirmation of electrical isolation before performing downstream maintenance.
- **Low Mechanical Complexity and Minimal Maintenance:** The simple mechanical switching mechanism provides long service life with very few moving parts.
- **Compact and Cost-Effective Distribution Switching Solution:** Load break switches allow efficient feeder control without the complexity of circuit breaker protection.

*Due to ongoing product improvements, actual delivered products may differ from the images shown.
*Optional equipment features are frequently illustrated.
*Availability of options varies by product series.

Innovative Main Bus

Figure 19*

Figure 20*

600A – 4000A Main Bus

- **Bracing Capacity:** Designed for systems ranging from 2.4kV to 38kV, with symmetrical short-circuit withstand capacities including 25kA, 31.5kA, and up to 50* kA and beyond, ensuring robust performance under fault conditions.
- **Performance:** These ratings offer flexibility and reliable performance, accommodating power systems with various available fault currents.
- **Ease of Accessibility:** via Front, Rear and Top depending on switchgear configuration.

Silver-Plated Copper Bus

- **Nominal Bus Current Ratings Available in:** 600A - 4000A @ 38kV max.**
- **Rated short-circuit withstand time:** 2 Seconds
- **Superior Conductivity:** Silver plating improves surface conductivity and ensures minimum contact resistance versus alternatives.
- **Low Heat Generation:** Lower resistance in silver-plated conductors can lead to reduced heat generation under high current loads.

**For voltages 17kV-38kV, please reference our 38kVmax. Switchgear Product Lines

*Due to ongoing product improvements, actual delivered products may differ from the images shown.
*Optional equipment features are frequently illustrated.
*Availability of options varies by product series.

Phase Barriers/Bus Segregation/Insulation

Figure 22*

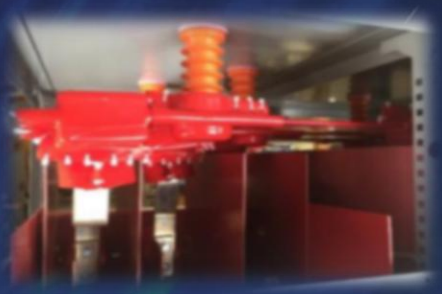

Figure 21*

Phase Barriers and Bus Segregation*

- Insulating Barriers between phases eliminate the need for the taping of the cable connections simplifying and reducing the cost of installation. This also allows for easy visual, mechanical and electrical inspection of cable connections, simplifying the switchgear maintenance for the life of the installation.
- Insulating or grounded barriers are provided to separate main bus from the line and load connections, providing degree of protection for main bus from the faults in cable terminations as well as providing degree of protection for the qualified personnel working in the cable connection area while the main bus is energized.

Bus Insulating Covering Options*

- Switchgear buses are generally designed to meet the dielectric withstand requirements of 19/36 kV for one minute and BIL of 60/95 kV with “uninsulated bus” and therefore not be dependent on any insulating bus coverings.
- Optional heat shrinkable or fluidized bed epoxy type coverings are available to supplement the dielectric strength and provide degree of protection in case of accidental contact by small animals or persons. In this case bolted connections are covered with removable insulating boots.

Figure 23*

Figure 24*

*Due to ongoing product improvements, actual delivered products may differ from the images shown.
*Optional equipment features are frequently illustrated.
*Availability of options varies by product series.

Instrument Transformers – PTs, CTs

Figure 25*

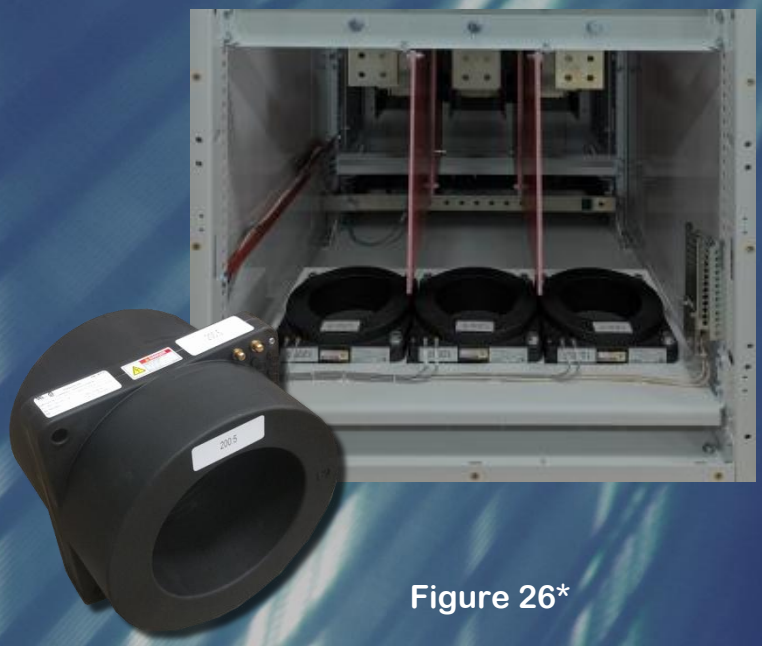

Figure 26*

Precision Voltage Transformers (VTs/PTs)

- **Configurable Voltage Sensing:** Available in WYE or Open Delta configurations, Fixed or Drawer mounted, enabling precise voltage sensing tailored to specific application needs and system requirements.
- **Reliable and Accurate:** Accuracy Class 0.3WXMYZ ensures accurate voltage measurements critical for protection, metering, and system monitoring.
- **Available on:**
  - Utility Sections for Line Side Incoming Main/Utility Sensing
  - Generator Sections for Line Side Incoming Generator Sensing
  - Single or Multiple Main Bus Sensing
  - Distribution Feeder Sensing

Advanced Current Transformers (CTs)

- **Diverse Application Support:**
  - Ratios: 50:5 - 4000:5
  - Relay Class: C10 – C400
  - ANSI Metering Class: 4.8B0.1 – 0.15B1.8 and beyond
- **Precision Metering Options:** Available in standard accuracy or high-precision, revenue-grade metering accuracy to support critical measurement and billing applications.
- **Mounting Over Shielded Power Cables:** allows for maintenance and replacement of the load side current transformers (with the corresponding feeder circuit breaker in Test/Disconnected Position) while the main bus remains energized, significantly improving the continuity of service.

*Due to ongoing product improvements, actual delivered products may differ from the images shown.
*Optional equipment features are frequently illustrated.
*Availability of options varies by product series.

Flexible Voltage Sensing Drawers

Figure 27*

Potential Transformer Drawer

- **Easy-Access PT Fuse Replacement:** Designed for quick, safe, and convenient fuse access and replacement, reducing maintenance time.
- **Automatic Safety Grounding:** Drawers and PTs are automatically grounded during the transition to the disconnected position for enhanced operator safety.
- **Insulated Mounting Assemblies:** Fully insulated to the system voltage rating, ensuring safety and reliable operation under all conditions.
- **Self-Aligning PT Drawer Contacts:** Self-aligning primary and secondary contacts ensure secure electrical connections.

Switchgear Sections with PT Drawer Configurations

- **PT Drawer/Breaker or Breaker/PT Drawer (up to 2 Drawers):**
  - Open Delta (PT-D)
  - WYE (PT-Y)
  - CPT or CPT Fuses
  - Top or Bottom cable entry.
- **Multiple PT Drawers Section (max. 3/section):**
  - PT-D or PT-Y drawer arrangements.
  - Flexible selection of bottom or top cable entry to meet site-specific installation requirements.
- **Dedicated PT/Metering Sections:**
  - Configurable for Main, Generator, Load, or Bus applications.
  - Open Delta (PT-D), Wye/Wye (PT-Y), or Grounded Wye Broken Delta sensing configurations.

Figure 28*

*Due to ongoing product improvements, actual delivered products may differ from the images shown.
*Optional equipment features are frequently illustrated.
*Availability of options varies by product series.

Protective Relaying Functions

Figure 29*

Figure 30*

Digital Multifunction Relays

APT uses industry-leading relay brands such as SEL, GE Multilin, Basler, Beckwith, ABB, Eaton, Siemens and more for overcurrent, voltage, frequency, differential, distance, directional power and ground fault protection in the following applications:

- Utility Intertie
- Paralleling Protection
- Advanced Generator Protection
- Tie Protection
- Transformer Protection
- Feeder Protection
- Various Differential Protection Schemes

All devices are factory-labeled and documented in submittals with wiring diagrams.

Common Relaying functions

- **50/51** – Inst./Time Overcurrent
- **50N/51N** – Inst./Time Ground Overcurrent
- **27/59** – Under/Overvoltage
- **59N** – Ground Overvoltage
- **81U/81O** – Under/Overfrequency
- **25** – Synch Check
- **32** – Reverse Power
- **40** – Loss of Excitation
- **60** – Current Balance
- **67** – Directional Overcurrent
- **86** – (LO) Lock-Out Relay (Knob Grip)
- **87** – Differential Protective Relay
- **87B** – Bus Differential
- **87G** – Generator Differential
- **And More!**

*Due to ongoing product improvements, actual delivered products may differ from the images shown.
*Optional equipment features are frequently illustrated.
*Availability of options varies by product series.

Lockout Relays & Test Switches

Figure 31*

Lockout 86 Function

- **Fail-Safe Design:** Designed to remain in the lockout condition until manually or electrically reset, ensuring full inspection before re-energization.
- **Knob-Grip Manual Reset:** Heavy-duty mechanical lockout relay with a manual reset knob. Activates on critical protection trips to disable automatic reclosing.
- **Visible Mechanical Target:** Red "TRIPPED" indicator shows at-a-glance breaker lockout condition.

Optional Test Switches & Test Plugs

- Provide a safe, simple, fast, and reliable method to isolate, test, and service installed equipment without disturbing the power system.
- Permits convenient isolation of relays, meters, and instrument transformers (PTs & CTs).
- Allows for quick and easy multi-circuit testing by conventional test methods.
- **Test Plug:** Enables easier measurement, calibration, verification and maintenance of relays, meters, PTs, & CTs.
- Conveniently connects external instruments to the same currents and voltages being applied to the panel relays and meters by the PTs, & CTs, without interrupting or short-circuiting the circuit.

Figure 32*

*Due to ongoing product improvements, actual delivered products may differ from the images shown.
*Optional equipment features are frequently illustrated.
*Availability of options varies by product series.

Power Sensing & Revenue Grade Metering

Figure 33*

Figure 34*

High Accuracy Power Quality Metering

METERING			
Parameters	Accuracy	Resolution	Range
Voltage	0.5%	0.1V	20V 1000kV~
Current	0.5%	0.001A	0~50000A
Current Demand	0.5%	0.001A	0~50000A
Power	0.5%	1W	-9999MW 9999MW~
Reactive Power	0.5%	1Var	-9999Mvar 9999Mvar~
Apparent Power	0.5%	1VA	0~9999MVA
Power Demand	0.5%	1W	-9999MW 9999MW~
Reactive Power Demand	0.5%	1Var	-9999Mvar 9999Mvar~
Apparent Power Demand	0.5%	1VA	0~9999MVA
Power Factor	0.5%	0,001	-1.0~1.0
Frequency	0.2%	0.01Hz	45.00~65.00Hz
Energy	0.5%	0.1kWh	0~99999999.9kWh
Reactive Energy	0.5%	0.1kvarh	0~99999999.9kvarh
Apparent Energy	0.5%	0,1 V ah	0~99999999.9kVAh
Harmonics	1.0%	0,01%	
Meter Running Time		0.1hrs	0 ~ 999999999.9hrs
Load Running Time		0.1hrs	0 ~ 999999999.9hrs

- Optional Revenue Grade
  - Active Energy Accuracy according to ANSI C12.20: Class 0.2s
- Optional Data Logging
- Optional Time of Use
- Optional Waveform Capture & Event Logging
- Optional Harmonic Resolution to the 63rd

Standard Advanced Metering Functions

- Voltage: V_A, V_B, V_C, V_{AB}, V_{BC}, V_{CA}
- Current: I_A, I_B, I_C, I_N
- Power: P_A, P_B, P_C, P_{sum}
- Reactive Power: Q_A, Q_B, Q_C, Q_{sum}
- Apparent Power: S_A, S_B, S_C, S_{sum}
- Frequency: F
- Power Factor: PF_A, PF_B, PF_C, PF
- Energy: Ep_{import}, Ep_{export}
- Reactive Energy: Eq_{import}, Eq_{export}
- Apparent Energy: Es
- Demand: Dmd_{IA}, Dmd_{IB}, Dmd_{IC}, Dmd_P, Dmd_Q, Dmd_S
- Power Quality
- Voltage Harmonics: 2nd - 31st and THD
- Current Harmonics: 2nd - 31st and THD
- Voltage Unbalance Factor: U_{unbl}
- Current Unbalance Factor: I_{unbl}
- Max/Min Statistics
- Meter Running Time and Load Running Time
- Pulse Output option
- RS485, industry standard Modbus RTU protocol
- Alarm Parameters
- Active Energy Accuracy according to ANSI C12.20: Class 0.5s

*Due to ongoing product improvements, actual delivered products may differ from the images shown.
*Optional equipment features are frequently illustrated.
*Availability of options varies by product series.

Utility & Generator Control/Paralleling

Figure 36*

Figure 37*

Figure 35*

Connect, Protect, Control

Utility Integration & Load Management

- Utility Intertie (UI)
- Utility Paralleling (UP)
  - Peak Shaving (PS)
  - Import/Export Control (IE)

Figure 38*

Figure 39*

Figure 40*

Seamless Power Continuity

Generator Paralleling & Redundancy

- ACM 5150 Paralleling Controller (PG1)
- N+1 Redundant Backup Transfer (N1)

*Due to ongoing product improvements, actual delivered products may differ from the images shown.
*Optional equipment features are frequently illustrated.
*Availability of options varies by product series.

Automatic & Manual Transfer Controls

Figure 41*

Switch Smarter, Power Safer

Automatic Transfer Systems

- Open Transition (OT2)
- Closed Transition (CT1)
- Soft loading & Unloading (SL1)
- Automatic Return to Normal (AR) – Standard
- Operator-Supervised Return (NA) – Optional

Figure 42*

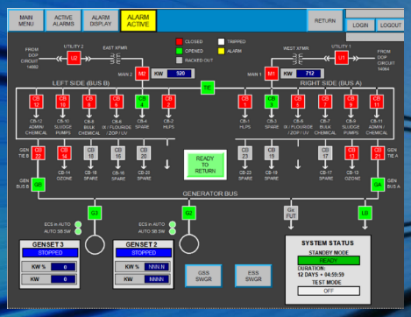

Figure 43*

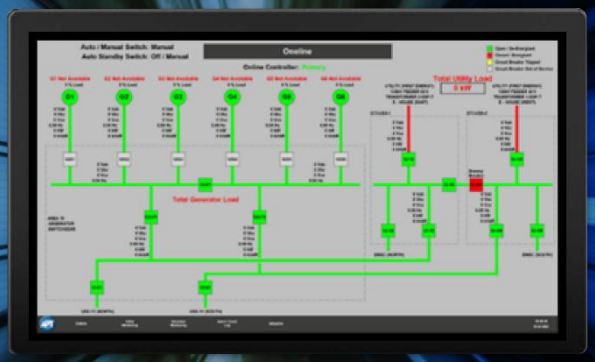

Figure 44*

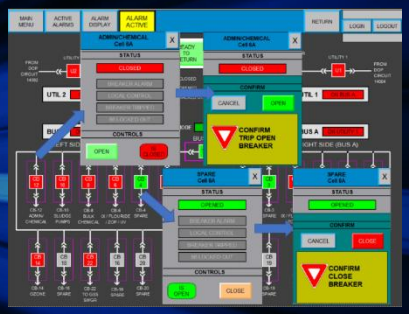

Figure 45*

Figure 46*

Safe Maintenance, Minimized Downtime

Maintenance & Bypass Isolation

- Main-Tie-Main Operation (MTM)
- Automatic Bypass (ATO-BI)
- Manual Bypass/Isolation (BI)
- Manual Transfer (MT) w/Captive Key Interlocking
- Solenoid Key Release Bypass (SK)

*Due to ongoing product improvements, actual delivered products may differ from the images shown.
*Optional equipment features are frequently illustrated.
*Availability of options varies by product series.

Advanced SCADA Controls - APTView

Demand Control, Simplified

Advanced Load Management
- Load Shed Prioritization (LSC)
- Load Add Control (LAC)
- Load Demand Optimization (LDC)

Figure 47*

Figure 48*

Advanced Master Control

20” minimum Touchscreen Display
Microgrid & Island Mode Capabilities
- Black Start for Turbines
- Island Mode Control (IM)
- Microgrid Integration (MG)

Control From Anywhere, Anytime

SCADA & Remote Management
- APTView Remote SCADA (AV)
- External BAS Integration (BSI)

Figure 49*

*Due to ongoing product improvements, actual delivered products may differ from the images shown.
*Optional equipment features are frequently illustrated.
*Availability of options varies by product series.

Master Control Panel (MCP)

Figure 50*

Figure 51*

Figure 52*

Master Control Panel Benefits

- Provides for the central point of control and monitoring of an entire system and interfaces with control systems at other locations.
- Configurable for control of incoming/outgoing utilities, tie breakers, generation sources, and load feeders for the ultimate in control flexibility.
- Customizable for any system/requirements.
- Provides events logging and automatic responses to changing conditions.
- Integrates the various pieces defined in other documents and makes them a system.
- Allows for full operational control and monitoring while keeping the operator outside of the arc-flash zone.
- Uninterruptable Power Supply keeps unit powered during unplanned outages

APT Intelligent Master Control Features and Parameters

- Monitoring of generator, utility and load electrical data:
  - Line to line voltages: Vab, Vbc, Vca
  - Source frequency: Hz
  - Phase currents: Ia, Ib, Ic
  - 3Ø power: kW, PF, kVAR, kVA
  - 3Ø energy: kWh import, kWh export, kVARh import, kVARh export
- Bus electrical data:
  - Line to line voltages: Vab, Vbc, Vca
  - Bus Frequency: Hz
- System Status Information (alarm and events log):
  - Source and Feeder circuit breakers position
  - Circuit breaker control switch in Trip position
  - Protective relaying trip
  - Battery charger alarms

*Due to ongoing product improvements, actual delivered products may differ from the images shown.
*Optional equipment features are frequently illustrated.
*Availability of options varies by product series.

AC Control Power – CPTs

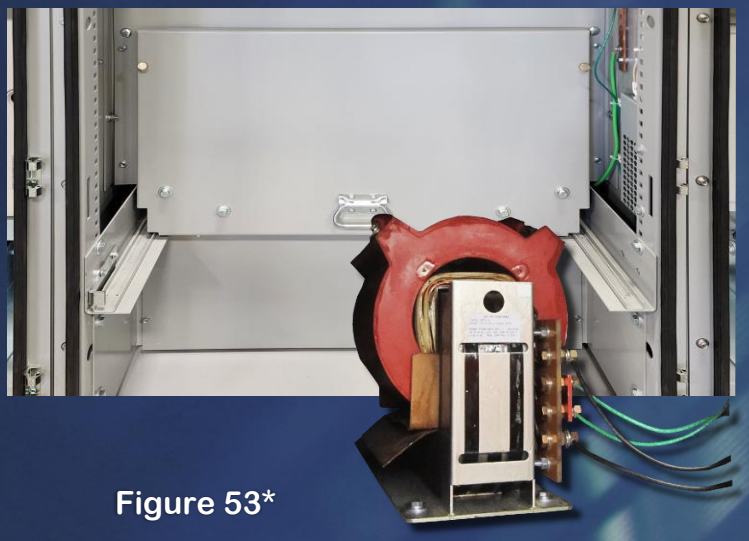

Figure 53*

AC Control Power Transformers (CPTs)

- **Versatile:** Multiple CPT ratings and protection options.
- **Enhanced Safety:** Automatic grounding, visible disconnects.
- **Easy Maintenance:** Front-access, standard fuses simplify servicing.

Customer Supplied AC Source & APT Integrated CPTs

- **120VAC Circuit Required:** Easily integrate APT Switchgear with new or existing facility-provided 120VAC sources to reliably power AC control loads and DC battery management systems or include an **APT CPT system** to derive internal AC control power directly from the switchgear.

CPT Code	Rating	Mounting Type
01	0.5–1 kVA	Fixed Mount or Withdrawable*
02	1–1.5 kVA	Fixed Mount or Withdrawable*
05	5 kVA	Fixed Mount or Withdrawable*
10	10 kVA	Fixed Mount or Withdrawable*
15	15 kVA	Fixed Mount or Withdrawable*
25	25 kVA	Fixed Mount
37	37.5 kVA	Fixed Mount
45	45 kVA	Fixed Mount
11	100 kVA	Fixed Mount
50	200 kVA	Fixed Mount

CPT Protection Options

- APT provides versatile CPT protection methods using industry-standard fuses or vacuum circuit breakers (VCBs).
- **Fuse Options:**
  - **Fixed Mount Fuses (with or without Disconnect):** Optional visible disconnect for servicing isolation.
  - **Withdrawable Fuses in Drawer:** Easy fuse access, self-aligning contacts, automatic grounding.
- **VCB Based Options:**
  - **Fixed Mount VCB:** Robust protection with rapid reset after trips.
  - **Withdrawable VCB:** adds visible disconnect isolation and simplifies maintenance.
- **Optional Redundant CPT with ATS:** CPT system with automatic transfer switch provides AC control power redundancy for enhanced system reliability.
- **Optional Three Phase Primary Connection**

*Due to ongoing product improvements, actual delivered products may differ from the images shown.
*Optional equipment features are frequently illustrated.
*Availability of options varies by product series.

DC Control Power – Batteries & Chargers

Comprehensive Switchgear Station Battery Systems

Whether you have an existing switchgear station battery system or are looking to purchase one, APT offers flexible battery solutions across multiple chemistries and voltages (24VDC, 48VDC, and 125VDC), tailored to your project's specific requirements and preferences.
Our standard 24 VDC battery system solutions deliver exceptional reliability, minimal maintenance, and robust performance, complemented by advanced integrated battery chargers designed specifically for our medium voltage (2.4kV–38kV, 3Ø) switchgear applications.

APT 24 VDC Switchgear Battery System Features

- **Maintenance-Free Operation:** Fully sealed, eliminating routine electrolyte checks.
- **Reliable High-Current Delivery:** Stable and dependable current for breaker trip/close and protective relay functions.
- **Compact Design:** Optimized for installations where space is limited.
- **High Efficiency & Fast Recharge:** Quick recovery to full capacity following discharge events.
- Standard Voltage: **24 VDC**

Optional Enhanced Features (Available Upon Request)

- **Extended Lifecycle:** Long-lasting performance with minimal degradation.
- **Advanced Battery Management System (BMS):** Real-time diagnostics, automated balancing, and continuous health monitoring & alarm status.
- **Ultra-Compact & Lightweight Construction:** Further reduced space requirements and ease of installation.
- **Enhanced Cycle Life & Longevity:** Superior long-term performance for demanding applications.
- Optional: **48 VDC, 125 VDC** upon request.

Figure 54*

*Due to ongoing product improvements, actual delivered products may differ from the images shown.
*Optional equipment features are frequently illustrated.
*Availability of options varies by product series.

Specialty 48VDC & 125VDC Systems

Nickel-Cadmium (NiCd) Rugged Reliability

- **Extreme Temperature Tolerance:** Excellent performance from -40°C to +50°C, ideal for harsh outdoor installations.
- **Long Service Life:** Robust construction delivers 15–25+ years of dependable service.
- **High Discharge Resilience:** Exceptional performance during deep discharge cycles and rapid recovery capability.
- **Maintenance Considerations:** Moderate routine maintenance (periodic electrolyte replenishment) balanced by exceptional reliability and lifecycle cost-effectiveness.
- **Advanced features supplied as required**

Figure 55*

Flooded Lead Acid (FLA) Proven Performance

- **Reliable, Proven Technology:** Long-established battery type delivering predictable performance and dependable service over 15–20 years.
- **High Current Capability:** Handles high instantaneous currents for breaker operations effectively.
- **Routine Maintenance:** Requires periodic electrolyte checks, watering, and maintenance, suitable for installations with structured maintenance resources.

Lead Selenium (PbSe) Premium Longevity

- **Extended Lifecycle:** Proven 15–20+ years of service life with excellent cycling capability.
- **Reduced Maintenance:** Low-maintenance vented battery type, fewer watering intervals than standard flooded cells.
- **Enhanced Thermal Stability:** Reliable in demanding environments with temperature fluctuations.
- **High-Rate Discharge:** Strong, stable current output ideal for breaker tripping and high load demands.

*Due to ongoing product improvements, actual delivered products may differ from the images shown.
*Optional equipment features are frequently illustrated.
*Availability of options varies by product series.

Switchgear Surge Arresters

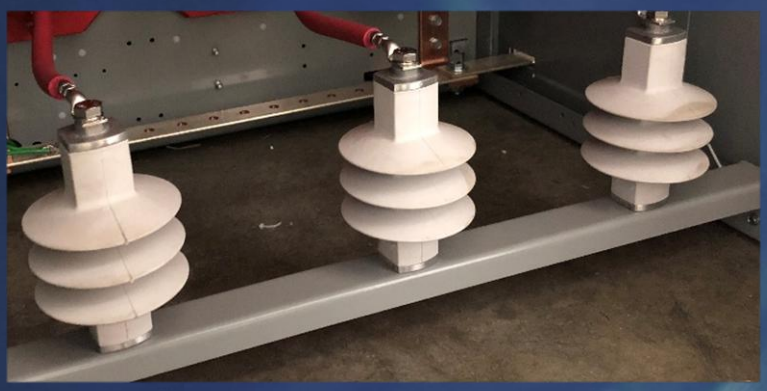

Figure 56*

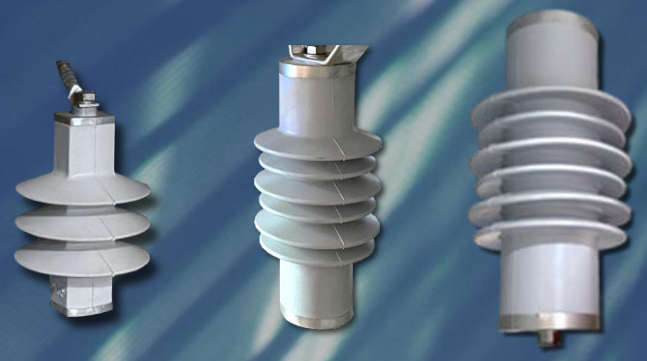

Figure 57*

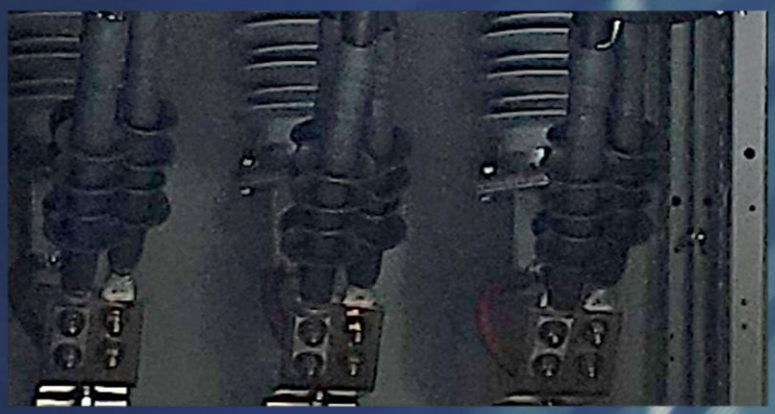

Figure 58*

Integrated Protection for Medium Voltage Switchgear

APT switchgear integrates high-performance metal oxide surge arresters to protect 2.4–38 kV systems from transient overvoltages caused by lightning strikes and switching surges. These arresters safeguard critical components; such as breakers, buses, and transformers as well as loads by limiting voltage to safer levels during surge events.

Available Arresters Characteristics & Classes

- **Metal-Oxide Varistor (MOV) Design: Gapless design ensures fast, consistent clamping without triggering delays.**
- **Polymer Encapsulated Housing: UV- and weather-resistant for long-term performance.**
- **Maintenance-Free: No required service or inspections over arrester life.**
- **Placement Options: Configurable for incoming lines, main bus taps, and feeder sections depending on system exposure and equipment sensitivity.**

Class	Use Case	Key Performance Features
Distribution Class	General duty protection for power systems	• Available in light, normal, and heavy duty • Compact size • Ideal for transformer and feeder protection
Intermediate Class	Enhanced protection for moderate surge environments	• Better clamping performance than distribution • Higher energy handling • Rugged, compact design for switchgear integration
Station Class	Highest-performance arrester for critical assets	• Best voltage protection • Highest energy and fault current withstand • Preferred for rotating machinery protection

*Due to ongoing product improvements, actual delivered products may differ from the images shown.
*Optional equipment features are frequently illustrated.
*Availability of options varies by product series.

Surge Capacitors and RC Snubbers

Figure 59*

Integrated RC Snubber Features

- **IEEE C57.142-2010 Compliant:** to meet transformers transient mitigation standard.
- **Controls Steep Voltage Rises:** Reduces dV/dt to protect winding insulation in transformers and rotating machines.
- **Suppresses Oscillations & Ringing:** Damps resonance from switching or current chopping events.
- **Protects Against Switching & Lightning Surges:** Complements surge arresters to reduce fast waveform overshoots.
- **Non-indictive components:** Features non-indictive resistors and capacitors.
- **Integrated in switchgear or Optional Standalone Cabinet:** Remote-mounted version for installation next to or in the transformer enclosure. Ideal for use with outdoor transformers or legacy switchgear installations. See APT's SurgeStop-Series RC Surge Snubbers.

Reducing Fast Transients Protecting Equipment

- Fast transients caused by vacuum breaker switching—such as current chop, prestrike, or re-strike—can result in steep voltage waves that exceed what standard surge arresters are designed to suppress. These fast-rising impulses can overstress insulation systems and cause premature transformer or motor failures.
- Extends Transformers, Generators & Motors Life: Prevents insulation stress from repeated high-frequency transients.
- Improves Switching Safety: Reduces pre-strike/re-strike effects during breaker operation.
- Recommended to be installed next to the protected equipment: Transformer, Generator or Motor.

Figure 60*

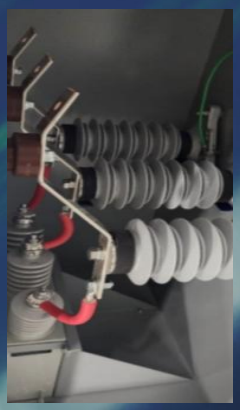

Figure 61*

*Due to ongoing product improvements, actual delivered products may differ from the images shown.
*Optional equipment features are frequently illustrated.
*Availability of options varies by product series.

Outdoor Walk-In Switchgear Enclosures

Engineered Precision, Delivered Performance

APT's **PwrHouse** and **PwrContainer** enclosures deliver industry-leading reliability, flexibility, and rapid deployment capabilities. Each solution is fully customizable to precisely meet your specific site and operational requirements, ensuring robust performance for critical power infrastructure.

Figure 62*

Figure 63*

Custom Modular Enclosures: Built for Specialization

PwrHouse:

- Tailored dimensions and modular flexibility to application-specific requirements.
- Fully integrated switchgear delivered ready for rapid commissioning.
- Robust construction adhering to stringent structural and environmental standards.
- Galvanized steel structure.
- Kynar 500 coated galvalume panels.
- Eliminates the need for shipping splits with compact, integrated switchgear design.
- Optional enhancements for critical operational conditions.

ISO Container Enclosures: Compact, Mobile, & Ready

PwrContainer:

- 20', 40', 45' ISO container-based, engineered for portability and immediate operational readiness.
- Ideal for rapid global deployment.
- Factory integrated switchgear and equipment in one self-contained unit significantly reducing on-site installation time.
- Easily Transportable by standard logistics networks: truck, rail, or ship.
- Optional features to withstand marine-grade environments, extreme seismic events, and Category 5 hurricanes available upon request.
- Optional Enhanced Marine-grade reinforced structural integrity with corrosion-resistant finishes and integrated environmental control.

*Due to ongoing product improvements, actual delivered products may differ from the images shown.
*Optional equipment features are frequently illustrated.
*Availability of options varies by product series.

APT PwrHouse – Walk-In Enclosure

Custom-Built Durability and Integration

APT's **PwrHouse** walk-in enclosures are meticulously engineered and factory-integrated to ensure structural integrity, durability, and simplified onsite deployment, explicitly designed to accommodate critical electrical systems safely and efficiently.

Figure 64*

Precision Engineered Modular Solutions

- **Robust Structural Integrity:**
  - Galvanized structural steel framing exceeding building code requirements.
  - ASTM A36 steel base ensures structural integrity for lifting and placing fully loaded enclosures.
  - Multi-rib panels with Kynar 500 finish, offer superior corrosion resistance.
  - Standing-Seam Metal Roof with UL 580 Class 90 Roof Uplift Certification.
- **Enhanced Safety & Comfort:**
  - Insulated steel doors with heavy-duty stainless-steel hinges and panic hardware.

Factory-Built for Rapid Onsite Deployment

- **Flexible Sizing & Rapid Deployment:**
  - Delivered fully integrated with no field assembly of internal components needed.
  - Compact design streamlines logistics, reduces installation time, and accelerates commissioning.
- **Compliance and Excellence:**
  - Detailed, accurate submittal documentation streamlines project approvals, reduces engineering, and installation risks.

*Due to ongoing product improvements, actual delivered products may differ from the images shown.
*Optional equipment features are frequently illustrated.
*Availability of options varies by product series.

APT PwrContainer – ISO Container Switchgear

Rapid, Efficient, & Robust Deployment

Engineered within ISO-certified sea-worthy containers, APT's **PwrContainer** enclosures offer unmatched portability, rapid deployment, and comprehensive environmental resilience for permanent & temporary global urban & rural operations and emergency response scenarios.

Figure 65*

Rugged, Robust Design ISO Container-Based Design

- **Superior Mobility and Reliability:**
  - Modified ISO shipping containers (20', 40', 45') allow international mobility, ideal for permanent, temporary, emergency, urban, or remote sites.
  - Eliminates onsite assembly; containers arrive fully tested and ready to operate immediately upon placement and acceptance testing.
- **Optional Marine-Grade Construction & Protection:**
  - Heavy-duty, reinforced steel framing and structural floor replacement ensures seismic stability and Category 5 hurricane resistance.
  - Corrosion-resistant marine-grade paint provides exceptional durability and heat deflection.

Fully Integrated Plug-and-Operate System

- **Enclosure Features:**
  - Insulated personnel doors with quick-escape panic hardware.
  - Closed-cell polyurethane foam insulation protects internal equipment from temperature extremes and condensation.
- **Integrated Systems and Optional Features:**
  - For additional customizable features such as corrosion-resistant coatings, HVAC redundancy, marine-grade protections, and advanced operational safety enhancements, please see the comprehensive list of optional features provided on the following page.

*Due to ongoing product improvements, actual delivered products may differ from the images shown.
*Optional equipment features are frequently illustrated.
*Availability of options varies by product series.

Optional Walk-In Enclosure Features

Tailored Optional Features

Customize your APT Walk-In Enclosure with specialized enhancements designed to maximize performance, reliability, safety, and adaptability for your exact operational needs.

Figure 66*

Figure 67*

Environmental Control & Interior Options

- (WA) – Climate-Controlled HVAC Systems (Heating, AC, Humidity Control)
- (WR) – Redundant Dual HVAC Systems with Automatic Lead-Lag Changeover
- (WH) – Anti-Condensation Aisle Strip Heating
- (WS) – Humidity Control System with Integrated Humidistat
- (WM) – Motorized Louvers for Optimized Ventilation
- (WN) – Corrosion-Resistant HVAC Coils
- (WL) – Enhanced Interior LED Lighting (≥300 lux)
- (WF) – Aluminum Diamond Plate Flooring
- (WK) – Non-Skid Epoxy Flooring

Optional Additions & Features Available

- (RD) – Rear Access Doors
- (WW) – Hinged Wireway
- (WC) – Cable Tray
- (WE) – Eye Wash Station
- (WU) – Corrosion-Resistant Aluminum Panels (PwrHouse Only)
- (WV) – Marine-Grade Corrosion Protection
- (WP) – Advanced Panel Insulation
- (WI) – Install UPS/BESS System
- (WD) – Control Room Desk
- (WJ) – Interior Divider Wall
- (WG) – Arc-Gas Venting Plenum System
- (WO) – Overhang Over Entrance Doors
- And more!

*Due to ongoing product improvements, actual delivered products may differ from the images shown.
*Optional equipment features are frequently illustrated.
*Availability of options varies by product series.

Application One-Line Diagrams

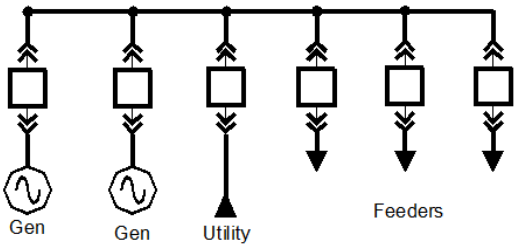

Figure 68*

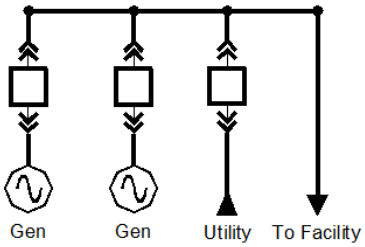

Figure 69*

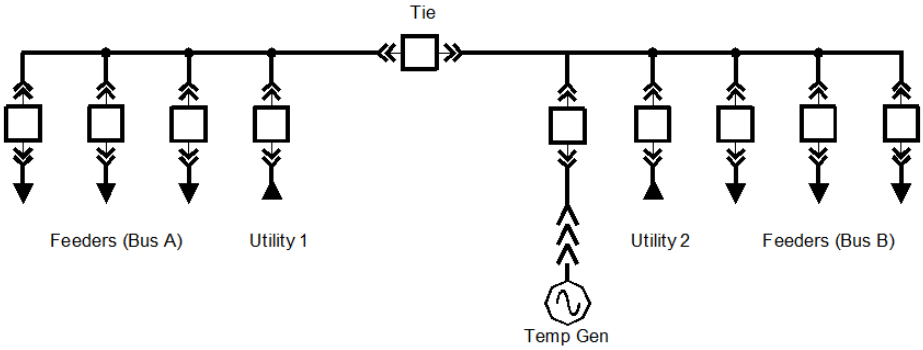

Figure 70*

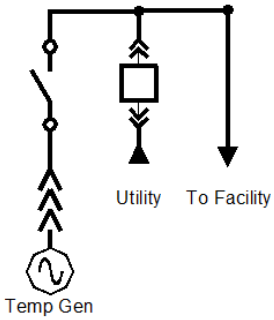

Figure 71*

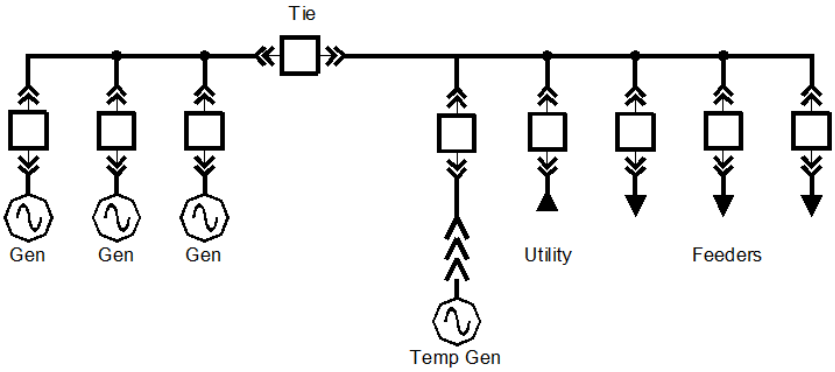

Figure 72*

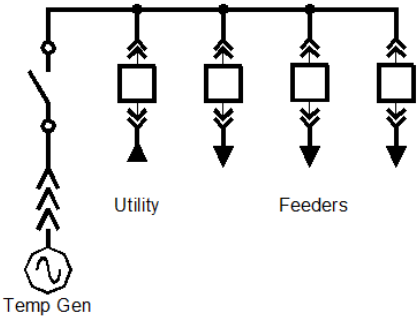

Figure 73*

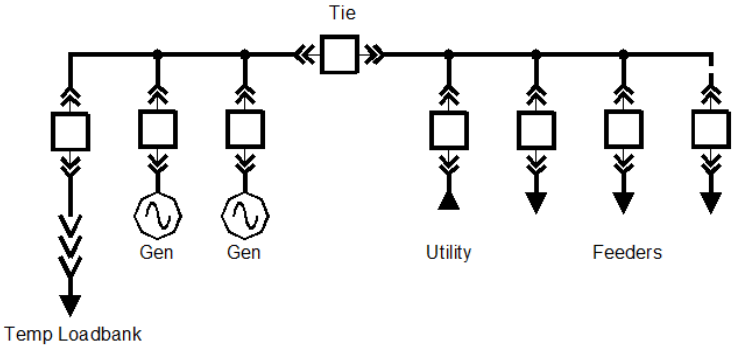

Figure 74*

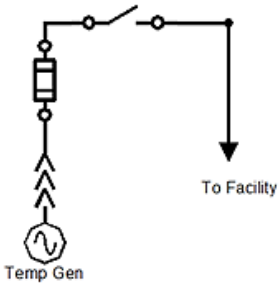

Figure 75*

*Due to ongoing product improvements, actual delivered products may differ from the images shown.
*Optional equipment features are frequently illustrated.
*Availability of options varies by product series.

About Advanced Power Technologies

Advanced Power Technologies (APT) is a leading innovator in engineered low and medium voltage power systems, delivering customized solutions worldwide. From our strategically central headquarters in Lafayette, Indiana, we design and manufacture precision-crafted switchgear, switchboards, and electrical infrastructure systems.

Decades of Expertise, Customized Solutions
Our skilled engineering team brings extensive experience across industries such as utilities, data centers, healthcare, agriculture, education, and commercial manufacturing. Leveraging cutting-edge switchgear technologies, we specialize in:

- 208V-800VAC Switchgear & Switchboards
- 2.4kV-38kV Custom Metal Enclosed/Clad Style Switchgear
- Generator Enclosure Package Integrated Equipment
- Utility and Generator Paralleling, Transfer, Peak Shaving & Distribution Switchgear
- Automatic & Manual Load Transfer Switchgear
- Outdoor Walk-In Electrical Houses (E-Houses) & Skid-Mounted Switchgear
- Containerized Switchgear & Battery Energy Storage Systems (BESS)
- Generator/Load Bank Quick Connection Switchgear, Switchboards, & Tap Boxes
- Microgrids, Master Control Panels, SCADA Systems
- Low & High Resistance Grounding Systems
- Bypass/Isolation & Power Distribution Circuit Breaker Switchboards
- Photovoltaic (PV) Solar Power Collection & Renewable Energy Storage Systems
- Motor Control Centers & Motor Control Switchgear
- High Efficiency Combined Heat and Power (CHP, Co-generation) Switchgear & Control Systems
- Industrial Control Panels

Precision Manufacturing & Innovation
APT proudly offers complete in-house, Made-in-USA manufacturing with precision metal fabrication capabilities, ensuring unparalleled quality, rapid turnaround, and tailored solutions that meet your exact specifications. As an OEM partner with industry leaders like Siemens, Square D, ABB, LG, and Eaton/Cutler Hammer, we integrate superior components into every system.

Flexible, Efficient, Scalable Solutions
APT provides highly flexible solutions with efficient production processes and scalable manufacturing capacities, tailored specifically to meet the demands of high-volume customers. Our capabilities position us ideally to serve large-scale operations including oil and gas producers, large data centers, extensive solar portfolios, and projects specified by leading engineers and facility managers.

Compact, Efficient, Reliable
APT excels at optimizing facility footprints and reducing installation costs through innovative, space-efficient designs. Each project benefits from our collaborative approach, open communication, and relentless commitment to customer success.
Discover more at www.apt-power.com, and let APT engineer the perfect power solution for your facility.